www.andamiro.com

SERVICE MANUAL

Ver 1.0

ISSUE DATE:Oct. 23, 2020

STOP

IMPORTANT

- Please read the manual carefully and keep it in mind before using this machine.
- Put this manual within touch of your reference in anytime.

PRECAUTIONS FOR USE

The following safety precautions are given throughout this manual. They must be strictly followed to protect those who install, use or maintain this product as well as to protect players, visitors and property.

For safety reasons.

- The following suggestions should be adhered to:

⚠ WARNING
Disregarding could result in serious injury.

⚠ CAUTION
Disregarding could result in injury or product damage.

- **The following graphic suggestions describe the types of precautions to be followed.**

⚠
Indicates a care should be taken.

⃠
Forbidden.

Indicates a matter which must be performed.

- **Precautions to be followed:**

Certain procedures require a qualified in-shop maintenance person or industry specialist.
For such instructions, a qualified person must take care of the jobs.

- Otherwise an electric shock, machine trouble or a serious accident may result.
- Replacing the machine parts, inspecting and maintaining the machines and troubleshooting must be assigned only to a qualified in-shop maintenance person or industry specialist. This booklet gives instructions that hazardous jobs in particular must be handled by an industry specialist. Qualified in-shop maintenance person and industry specialist are defined as follows.

Qualified in-shop maintenance person

- A service staff shall have experience in operations of game machines. The staff shall be responsible for assembly, installation, inspection and maintenance of the machine.

Industry specialist

- An industry specialist must be engaged in designing, manufacturing, inspecting and servicing amusement machines. He or she must have an education in electrical, electronic and mechanical engineering and routinely maintain and repair amusement machines.

PRECAUTIONS FOR USE

⚠WARNING

Be sure to consult an industry specialist when setting up, moving or transporting this product.

- This product should not be set up, moved or transported by any one other than an industry specialist.
- When installing this product, set the 4 leg levelers evenly on the floor and make sure that the product is installed stably in a horizontal position. Unstable installation may result in injury or accident.
- When installing this product, do not apply undue force on movable parts. Otherwise, injury and accident may result, or the product may be damaged.

The machine for indoor usage only does not install outside.

Do not set the game machine up near emergency exits.

Protect the game machine from:

- Rain or moisture.
- Direct sunlight.
- Direct heat from air-conditioning and heating equipment, etc..
- Hazardous flammable substances.
- Otherwise an accident or malfunction may result.

Do not place containers holding chemicals or water on or near the game machine.

Do not place objects near the ventilating holes.

Do not bend the power cord by force or place heavy objects on it.

Never plug or unplug the power cord with wet hands.

Never unplug the game machine by pulling the power cord.

⚠ CAUTION

Be sure to use indoor wiring within the specified voltage requirements. For extension cord, use the specified rating or more.

Be sure to use the attached power cord.

Never plug more than one cord at a time into the electrical receptacle.

Do not lay the power cord where people walk through.

Be sure to ground this product.

Do not exert excessive force when moving the machine.

For proper ventilation, keep the game machine 100mm(4″) away from the walls.

Do not alter the system related dipswitch settings.

PRECAUTIONS FOR USE

⚠ WARNING

If there is any abnormality such as smoke, bad smell or abnormal noise being emitted from the machine, immediately turn OFF the main power switch and unplug the power cord from the receptacle to stop operating it.

- Using the machine in abnormal conditions could result in fire or accidents.

In case of abnormality

1. Turn OFF the main power switch.
2. Unplug the power cord from the receptacle.
3 . Contact your nearest dealer.

Do not leave the power cord plugged in improperly or covered with dust.

- Doing so could result the power cord periodically.

⚠ CAUTION

Do not use this product anywhere other than industrial areas.

- Using in a residential area or an area next to a residential area could affect signal reception of radios, television sets, telephones and etc..

- Do not give shock the surface of glass products.

- Please do not play this game if
  - When you do drinking;
  - When your physical condition is not normal;
  - When you are in pregnancy;
  - When you have on a pulse controller;
  - When you have recently experienced a cramp or fainting away while watching TV.
- Avoid excessive force/shock while playing/moving the game.
- While do games, pay attention to surrounding.

Do not plug or unplug the power cord with wet hands.

In handling the power cord, follow the instructions below.

- Do not damage the power cord.
- Do not bend the power cord excessively.
- Do not heat the power cord.
- Do not bind the power cord.
- Do not sandwich the power cord.
- Do not modify the power cord.
- Do not twist the power cord.
- Do not pull the power cord.
- Do not stand on the power cord.
- Do not drive a nail into the power cord.

If the power cord or power plug becomes damaged, stop using the machine immediately and ask your nearest dealer to replace the parts.

*** Electromagnetic wave may cause unexpected noise from speaker.**

PRECAUTIONS FOR USE

⚠ WARNING

Be sure to turn OFF the main power switch and unplug the power cord from the receptacle before inspecting or cleaning the machine.

When replacing parts, be sure to use parts of the correct specifications. Never use parts other than the specified ones.

Opening inside the machine shall be done by machine specialist only as high electric current is being sent inside. For game machine with monitor, a care should be taken while opening its back door. If not, a damage to the inside parts or the monitor may occur.

If the sub power switch of the service panel is turned OFF without turning OFF the main power switch of the power supply unit, some parts in the units remain live. When opening the back door, be sure to turn OFF the main power switch and unplug the power cord from the receptacle.

Strictly refrain from disassembly and repair of parts which are not indicated in this manual, as well as settings and remodeling.

To clean the game machine, wipe it with a soft cloth dampened in a neutral detergent.

- Using thinner of other organic solvent or alcohol may decompose the material.
- Electrical shock or equipment failure could be caused by water entering the inside of the machine.

⚠ CAUTION

Components in the game are sensitive to vibrations and impact. Care should be used when moving and transporting the game machine.
Be sure not to let the machine tip over.

Before moving the machine, be sure to turn OFF the main power switch, unplug the power cord from the receptacle and remove the power cord form the machine.

Before moving take the machine, off the levelers and move it on the casters.

Avoid excessive force while moving the machine.

PRECAUTIONS IN HANDLING

- When setting up, inspecting, maintaining, moving or transporting this product, follow the procedures and instructions set forth in this manual and perform such work safely.
- Do not set up, handle, inspect, maintain, move or transport this product under conditions equivalent to the condition of "WARNING" or "CAUTION" specified in this manual.
- If a new owner is to have this product as a result of transfer, and etc., be sure to give this manual to the new owner.

PRÉCAUTION D'EMPLOI

Les consignes de sécurité suivantes sont données dans ce manuel. Elles doivent être strictement suivies pour protéger ceux qui les installent. Utiliser ou entretenir ce produit pour la sécurité des utilisateurs, des visiteurs et des biens.

Pour des raisons de sécurité.

- **Les suggestions suivantes doivent être respectées:**

⚠ ATTENTION
Le non-respect peut entraîner des blessures graves.

⚠ PRUDENCE
Le non-respect peut entraîner des blessures ou des dommages au produit.

- **Les suggestions graphiques suivantes décrivent les types de précautions à prendre.**

⚠
Indique qu'attention est requise.

⃠
Interdit.

Indique que quelque chose doit être effectuée.

- **Les précautions à prendre :**

Certaines procédures exigent une personne de maintenance qualifiée en atelier ou un spécialiste de l'industrie. Pour ces instructions, une personne qualifiée doit prendre soin des travaux.

- Sinon, un choc électrique, un dysfonctionnement de la machine, ou un accident grave peut en résulter.
- Remplacement des pièces de machines, l'inspection et la maintenance des machines, et le dépannage doit être attribué qu'à une personne de maintenance qualifiée en atelier ou spécialiste de l'industrie. Cette brochure donne des instructions que les emplois dangereux, en particulier, doivent être traités par un spécialiste de l'industrie. La personne de maintenance qualifiée en atelier et le spécialiste de l'industrie sont définis comme suit.

La personne de maintenance qualifiée en atelier

- Un personnel de service doit avoir de l'expérience dans les opérations de machines de jeux. Le personnel est responsable pour l'assemblage, l'installation, l'inspection et l'entretien de la machine.

Le spécialiste de l'industrie

- Un spécialiste de l'industrie doit être engagé dans la conception, la fabrication, l'inspection et l'entretien des appareils d'amusement.
  Il ou elle doit avoir une formation en génie électrique, électronique et mécanique, et de maintenir régulièrement et de réparer les appareils d'amusement.

PRÉCAUTION D'EMPLOI

⚠ ATTENTION

Si il y a une anomalie comme fumée, mauvaise odeur ou bruit anormal émis par la machine, couper immédiatement l'interrupteur principal et débranchez le câble d'alimentation de la prise pour arrêter son fonctionnement.

- L'utilisation de l'appareil dans des conditions anormales peut provoquer un incendie ou un accident.

En cas d'anomalie

1. Mettez l'interrupteur principal sur ARRÊT.
2. Débranchez le câble d'alimentation de la prise.
3. Contactez votre revendeur le plus proche.

Ne pas brancher le câble d'alimentation incorrectement ou le laisser être recouvert de poussière.

Cela pourrait nuire le câble d'alimentation.

⚠ PRUDENCE

Ne pas utiliser ce produit ailleurs que dans les zones industrielles.

- L'utiliser dans une zone résidentielle ou d'une zone à côté d'un quartier résidentiel pourrait nuire à la réception des radios, téléviseurs, téléphones, etc.
- Ne donnez pas de choc à la surface d'un produit en verre.

- S'il vous plaît ne pas jouer à ce jeu.
  - Quand vous buvez;
  - Lorsque votre condition physique n'est pas normale;
  - Lorsque vous êtes dans une période de grossesse;
  - Lorsque vous avez un contrôleur d'impulsion;
  - Lorsque vous avez récemment subi une crampe ou évanouissement en regardant la télévision.
- Évitez une force excessive / un choc pendant la lecture / de déplacer le jeu.
- Quand vous jouez les jeux, faite attention aux alentours.

Ne pas brancher ou débrancher le câble d'alimentation avec les mains mouillées.

Dans la manipulation du câble d'alimentation, suivez les instructions ci-dessous.

- Ne pas endommager le câble d'alimentation.
- Ne pas plier le câble d'alimentation de manière excessive.
- Ne pas chauffer le câble d'alimentation.
- Ne pas lier le câble d'alimentation.
- Ne pas prendre en sandwich le câble d'alimentation.
- Ne pas modifier le câble d'alimentation.
- Ne tordez pas le câble d'alimentation.
- Ne tirez pas sur le câble d'alimentation.
- Ne montez pas sur le câble d'alimentation.
- Ne pas mettre un clou dans le câble d'alimentation.

Si la fiche du câble d'alimentation ou est endommagé, cessez immédiatement d'utiliser la machine et demandez à votre revendeur le plus proche de remplacer les pièces.

PRÉCAUTION D'EMPLOI

⚠ ATTENTION

Assurez-vous de consulter un spécialiste de l'industrie lors de la mise en place, du déplacement ou le transport de ce produit.

- Ce produit ne doit pas être mis en place, déplacé ou transporté par une quelconque autre qu'un spécialiste de l'industrie.
- Lors de l'installation de ce produit, installez 4 niveleurs de pieds uniformément sur le sol et assurez-vous que le produit est installé de façon stable dans une position horizontale. Une installation instable peut entraîner des blessures ou un accident.
- Lors de l'installation de ce produit, ne pas appliquer une force excessive sur les pièces mobiles. Sinon, des blessures et des accidents peuvent y résulter, ou le produit peut être endommagé.

La machine pour une utilisation en intérieur uniquement, ne pas installer à l'extérieur.

N'installez pas la machine de jeu près des issues de secours.

Protéger la machine de jeu de:

- L'humidité ou la pluie.
- La lumière directe du soleil.
- La chaleur directe de la climatisation et du chauffage, etc...
- Des substances inflammables dangereuses.
- Sinon, un accident ou un dysfonctionnement.

Ne pas placer les récipients contenant des produits chimiques ou de l'eau sur ou près de la machine de jeu.

Ne placez pas d'objets à proximité des orifices de ventilation.

Ne pas plier le cordon d'alimentation par la force ou de placer des objets lourds au-dessus.

Ne jamais brancher ou débrancher le cordon d'alimentation avec les mains mouillées.

Ne jamais débrancher la machine de jeu en tirant le câble d'alimentation.

⚠ PRUDENCE

Veillez à utiliser le câblage intérieur selon les exigences de tension spécifiées. Pour une rallonge, utilisez la notation spécifiée ou plus.

Veillez à utiliser le cordon d'alimentation fourni.

Ne jamais brancher plus d'un cordon à la fois dans la prise électrique.

Ne pas poser le cordon d'alimentation où les gens marchent à travers.

Soyez sûr de mettre à la terre ce produit.

Ne pas exercer une force excessive lors du déplacement de la machine.

Pour une ventilation correcte, garder la machine de jeu 100mm (4 ") loin des murs.

Ne pas modifier les réglages des commutateurs DIP liées au système.

PRÉCAUTION D'EMPLOI

⚠ ATTENTION

Veillez à éteindre l'interrupteur d'alimentation principale et débranchez le cordon d'alimentation de la prise avant d'inspecter ou de nettoyer la machine.

Lors du remplacement des pièces, veillez à utiliser une partie des spécifications correctes. Ne jamais utiliser de pièces autres que celles spécifiées.

L'ouverture à l'intérieur de la machine doit être effectuée par le spécialiste de la machine seulement, comme le courant électrique élevé est transmis à l'intérieur. Pour la machine de jeu avec le moniteur, un soin doit être pris lors de l'ouverture de sa porte arrière. Si non, une détérioration des pièces à l'intérieur ou à l'écran peut se produire.

Si l'interrupteur secondaire du panneau de service est éteint sans éteindre le commutateur d'alimentation principale de l'unité d'alimentation, certaines parties dans les unités restent sous tension. Lors de l'ouverture de la porte arrière, veillez à éteindre l'interrupteur d'alimentation principale et débranchez le cordon d'alimentation de la prise.

Il est strictement conseiller de s'abstenir de démonter et de réparer des pièces qui ne sont pas indiqués dans ce manuel, ainsi que les paramètres et le remodelage.

Pour nettoyer la machine de jeu, l'essuyer avec un chiffon doux imbibé avec un détergent neutre.

- L'utilisation plus mince d'un autre solvant organique ou de l'alcool peut décomposer le matériel.
- Un choc électrique ou une défaillance de l'équipement pourraient être causés par la pénétration de l'eau à l'intérieur de la machine.

⚠ PRUDENCE

Les composants de la machine de jeu sont sensibles aux vibrations et aux chocs. Il faut faire attention lors du déplacement et le transport de la machine de jeu.
Veillez à ne pas laisser la machine se renverser.

Avant de déplacer la machine, veillez à éteindre l'interrupteur d'alimentation principale, débranchez le cordon d'alimentation de la prise et débranchez le cordon d'alimentation de la machine.

Avant de déplacer la machine, la mettre hors des niveleurs et le déplacer sur les roulettes.

Éviter une force excessive lors du déplacement de la machine.

PRÉCAUTIONS LORS DU MANIEMENT

- Lors de la mise en place, l'inspection, l'entretien, déplacement ou le transport de ce produit, suivez les procédures et les instructions énoncées dans ce manuel et effectuer ce travail en toute sécurité.
- Ne pas mettre en place, manipuler, inspecter, entretenir, déplacer ou transporter ce produit dans des conditions équivalentes à l'état de "ATTENTION" ou "PRUDENCE" spécifiée dans ce manuel.
- ISi un nouveau propriétaire obtient ce produit à la suite d'un transfert, etc., soyez sûr de donner ce manuel au nouveau propriétaire.

CONTENTS

1. SPECIFICATION AND DIMENSION P03

1-1. DIMENSION P03

1-2. SPECIFICATION P04

1-3. NAME OF PARTS P04

1-4. STICKER LOCATION P05

1-5. COMPONENTS P06

2. INSTALLATION P07

2-1. INSTALLATION SPACE P07

2-2. HOW TO INSTALL P08

3. SETUP SETTINGS P09

3-1. MACHINE SETUP P09

3-2. PROGRAM SETTING P10

3-3. CLEAR MODE P16

3-4. TEST MODE P19

3-5. ERROR CODE P25

3-6. ERROR CODE ERROR DETECTION METHOD P27

4. TROUBLESHOOTING P29

4-1. SERIAL COMMUNICATION ERROR [E.21] P29

4-2. MAIN CHECKER MOTOR ERROR [E.31] P30

4-3. MAIN CHECKER MOTOR ERROR [E.31] P32

4-4. MAIN CHECKER SENSOR ERROR [E.35] P34

4-5. PUSHER MOTOR ERROR [E.41] P36

4-6. PUSHER SENSOR ERROR [E.41] P38

4-7. BONUS BALL SHOOTING MOTOR ERROR [E.51] P40

4-8. BONUS BALL SENSOR ERROR [E.51] P42

4-9. BONUS BALL SHOOTING ERROR [E.52] P44

4-10. BONUS BALL SHOOTING ERROR [E.52] P46

4-11. MAIN BALL SHOOTER MOTOR ERROR [E.61] P48

4-12. MAIN BALL SHOOTER SENSOR ERROR [E.61] P50

4-13. MAIN BALL SHOOTER ERROR [E.62] P52

4-14. MAIN BALL SHOOTER SENSOR ERROR [E.62] P54

4-15. INTERNAL BALL CIRCULATION EV MOTOR ERROR [E.71] P56

4-16. INTERNAL BALL CIRCULATION EV SENSOR ERROR [E.71] P58

4-17. INTERNAL BALL CIRCULATION BRIDGE MOTOR ERROR [E.72] P60

4-18. INTERNAL BALL CIRCULATION BRIDGE SENSOR ERROR [E.72] P63
4-19. CARD DISPENSOR MOTOR ERROR [E.81] P65
4-20. CARD DISPENSOR SENSOR ERROR [E.81] P67
4-21. CHIP HOPPER ERROR [E.81] P69
4-22. CHIP HOPPER ERROR [E.81] P71
5. EXPLODED VIEW P73
5-1. MAIN CABINET PART P73
5-2. BILLBOARD PART P74
5-3. SMPS PART P75
5-4. MAIN BOARD PART P75
5-5. BBE ASS'Y SUPPORT BKT PART P75
5-6. CONTROL PANEL PART P76
5-7. CABINET BOTTOM FLEXIBLE LED PCB PART P76
5-8. CARD DISPLAY PART P77
5-9. CABINET MONITOR SIDE-L, R PART P77
5-10. BBE TOTAL PART P78
5-11. BCE TOTAL PART P79
5-12. BSE TOTAL PART P80
5-13. PUSHER PLATE PART P81
5-14. MONITOR PLATE PART P82
5-15. BONUS TARGET PART P83
5-16. CHIP HOPPER PART P84
5-17. CARD DISPENSOR PART P85
5-18. SPEAKER PART P86
5-19. BUTTON PLATE PART P86
5-20. MIDDLE DISPLAY PART P87
5-21. FRONT UPPER DOOR PART P87
5-22. FRONT LOWER DOOR PART P88
5-23. TICKET DOOR PART P88
5-24. BALL FENCE PART L, R P89
6. WARRANTY ITEM & PART PICTURE P90
* HOW TO CONNECT THE CARD SWIPE P95
* HOW TO ADJUST THE GAP OF CARD DISPENSER P96
7. BLOCK DIAGRAM P98

1. SPECIFICATION AND DIMENSION

1-1. DIMENSION

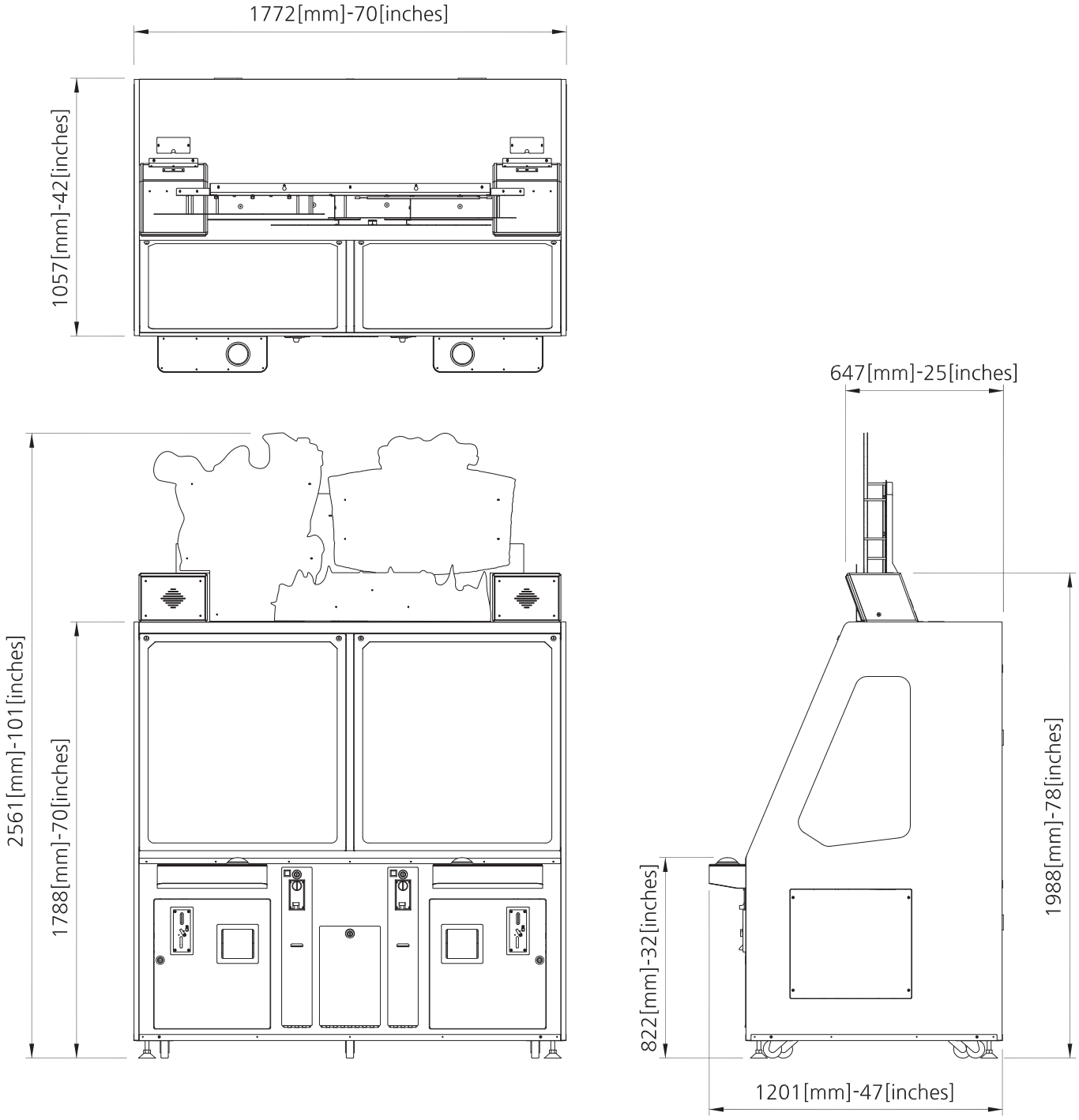

1-2. SPECIFICATION

DIMENSION (W x D x H)	1772 x 1201 x 2561(mm)
PACKING DIMENSION (W x D x H)	- x - x - (mm)
WEIGHT (kg)	- kg [WEIGHT INCLUDING : - kg] PACKAGING
VOLTAGE	AC 120V
FREQUENCY RANGE	60Hz
CONSUMPTION	700W

* The 120V voltage specification is for the Americas only, and the 230V (50/60Hz) voltage specifications are for other countries.

1-3. NAME OF PARTS

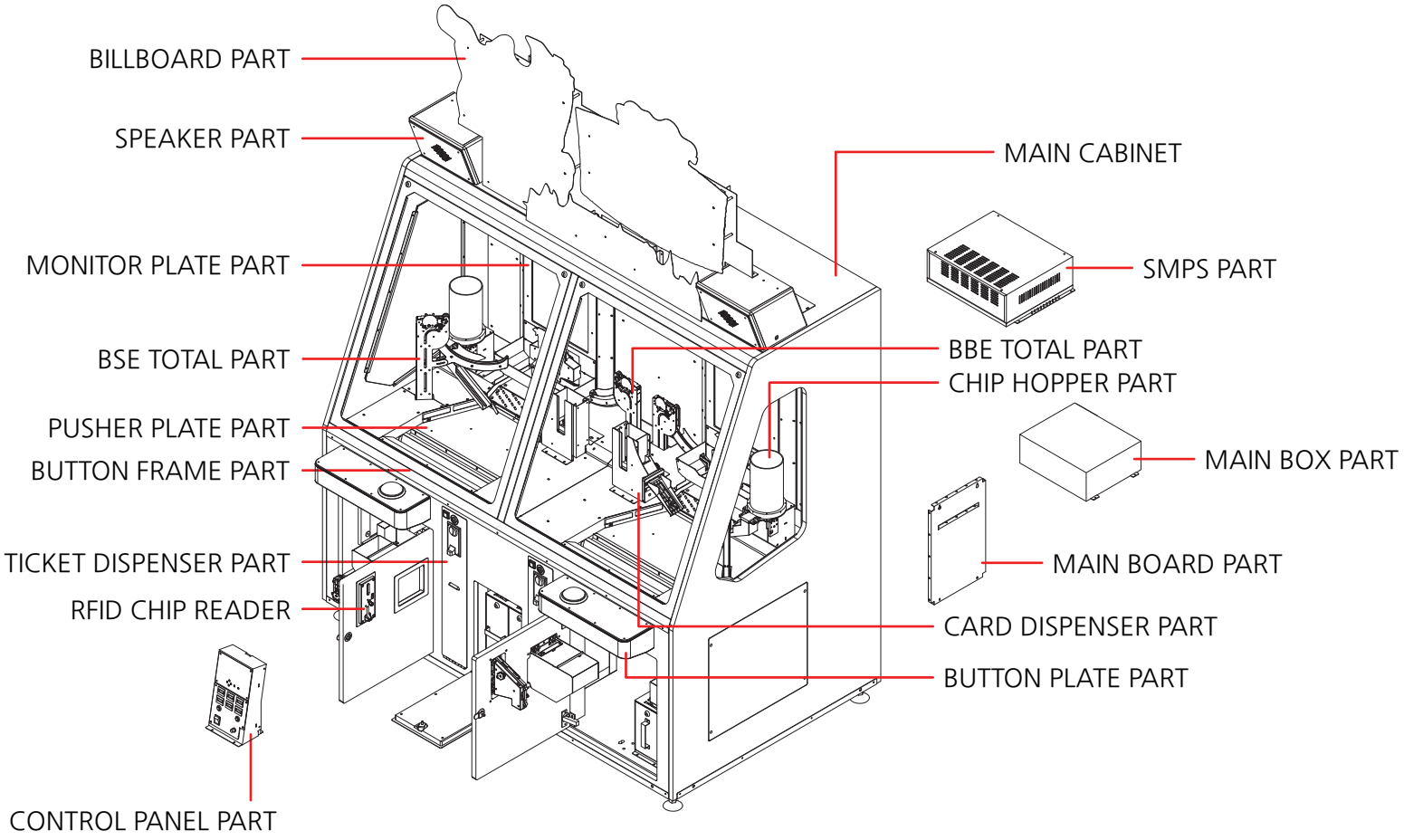

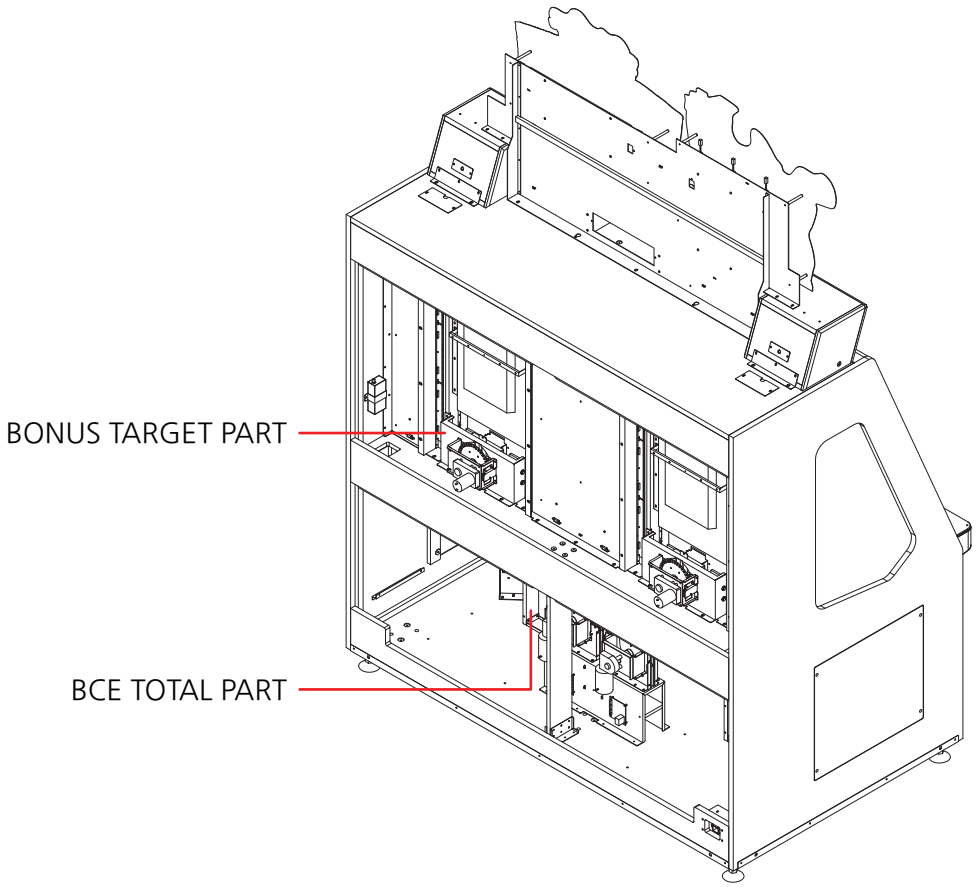

1-4. STICKER LOCATION

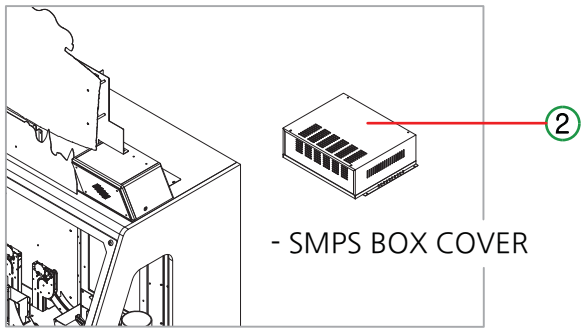

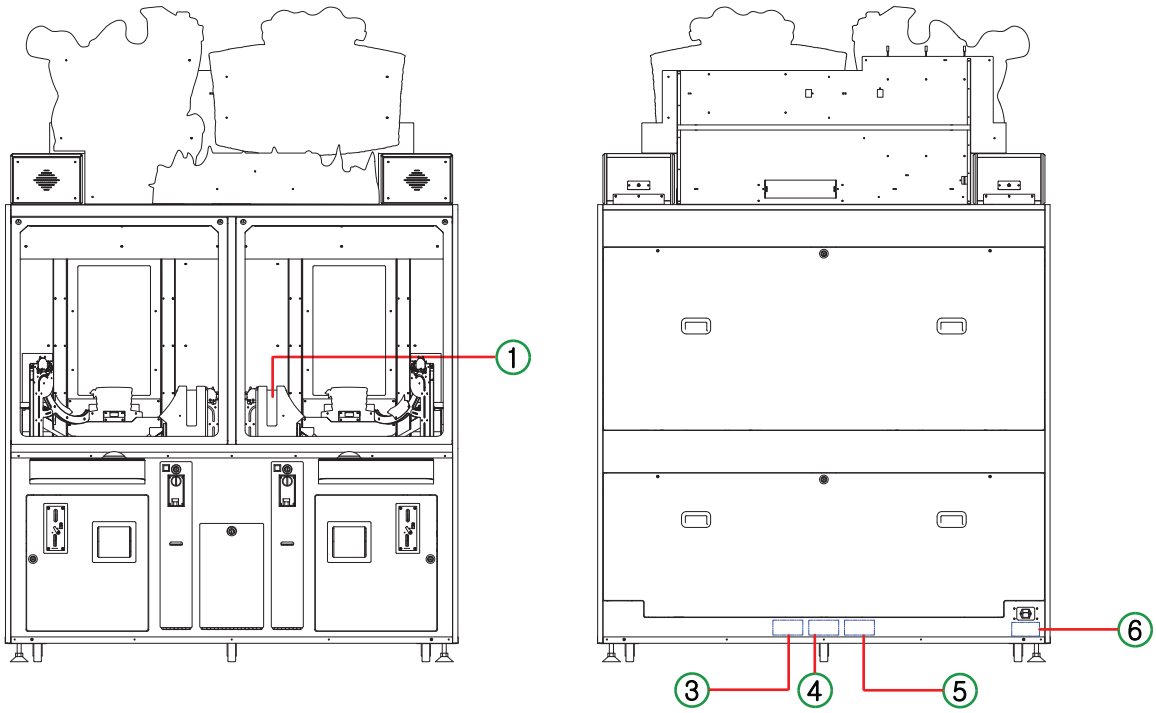

1

2

3

4 **Certification Label**

5

6

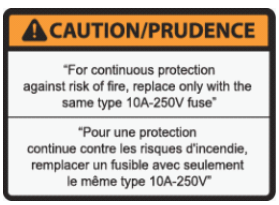

1-5. COMPONENTS

NO.	PART NAME	SPEC.	QTY
1	AC POWER CORD	- 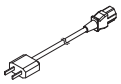	1
2	KEY	6001, 7001	2 EACH
3	BOLT	M4x8L	17
4	BOLT	M4x12L	20
5	BOLT	M4x16L	10
6	BOLT	M4x20L	16
7	BOLT	M4x25L	8
8	BOLT	M6x20L	12
9	BOLT	M6x25L	9
10	WRENCH	2.5, 3, 4, 5 mm	1 EACH
11	CARD	-	150
12	RFID CHIP	-	300
13	BALL	-	1300
14	CARD SETTING JIG	-	1
15	CARD HEAVY PUSH BKT	-	1
16	MANUAL	-	1
17	TROUBLESHOOTING MANUAL	-	1

2. INSTALLATION

2-1. INSTALLATION SPACE

- Need to have installation place.
  Maintenance zone & Play zone should have at least
  2500mm x 2500mm each.

***IMPORTANT**

- Once you set up the machine with required game-play area, when installing this product, set the 4 leg levelers evevly on the floor and make sure that the product is installed stably in a horizontal position.

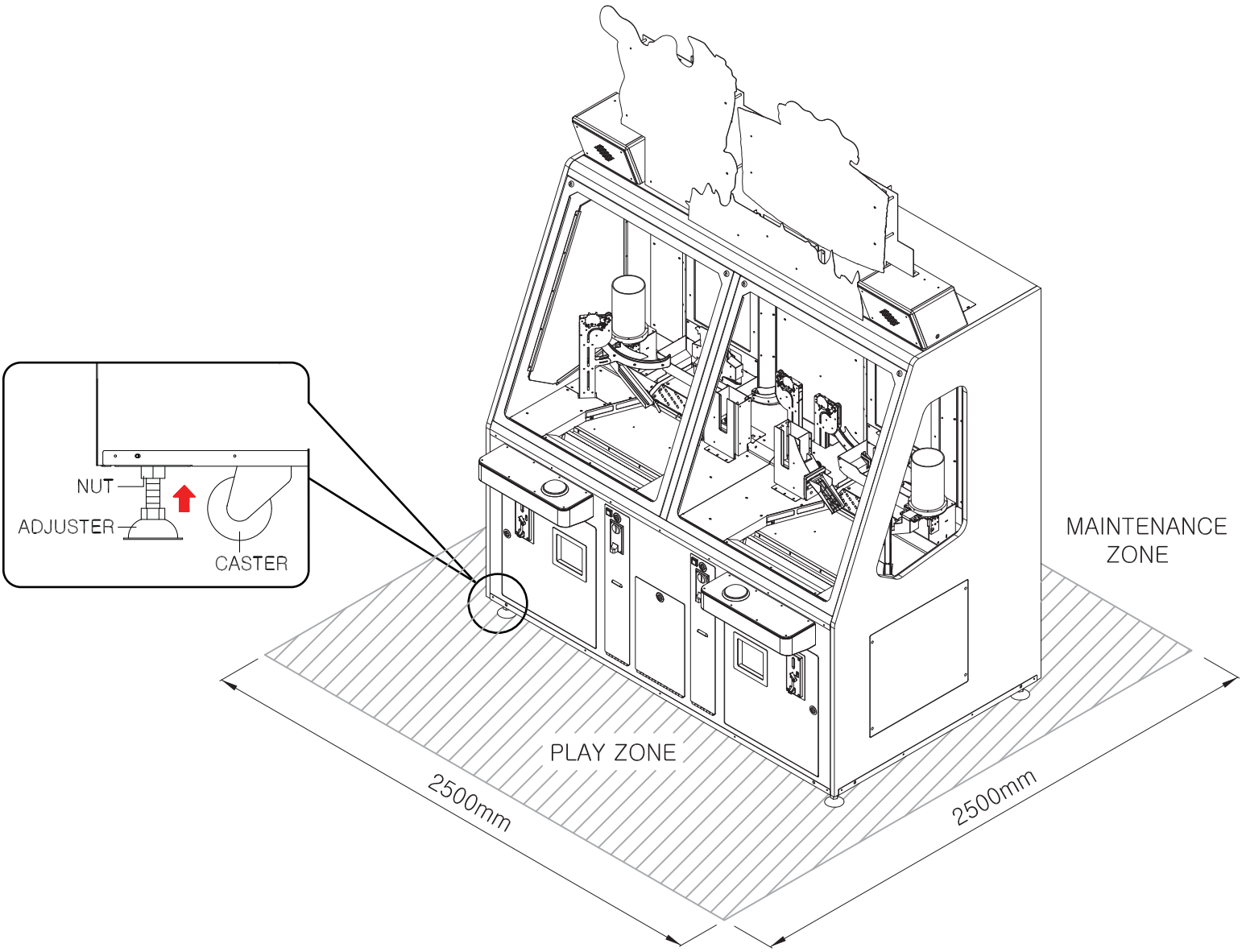

2-2. HOW TO INSTALL

1 * BILLBOARD ASS'Y

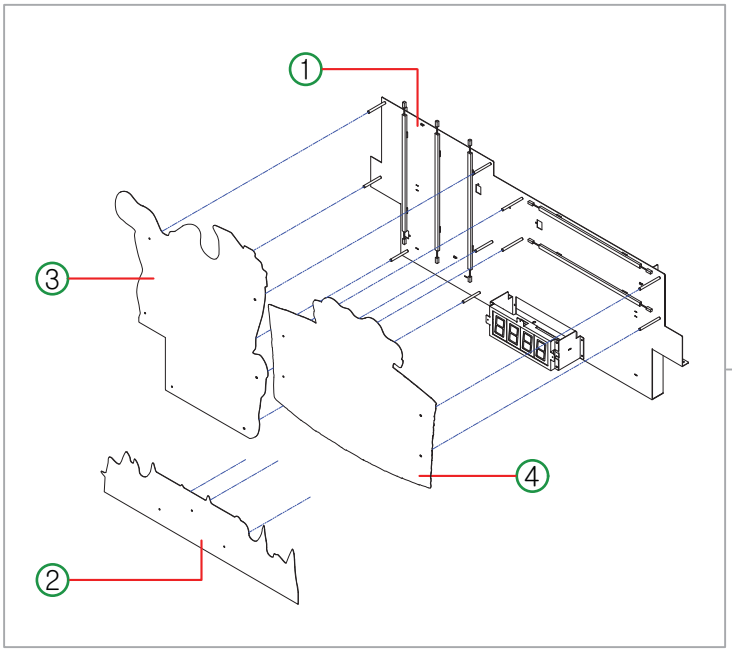

- Please assemble in order of pictures from ① to ⑫

* Connector assembly when assembling ⑥, ⑧, ⑫

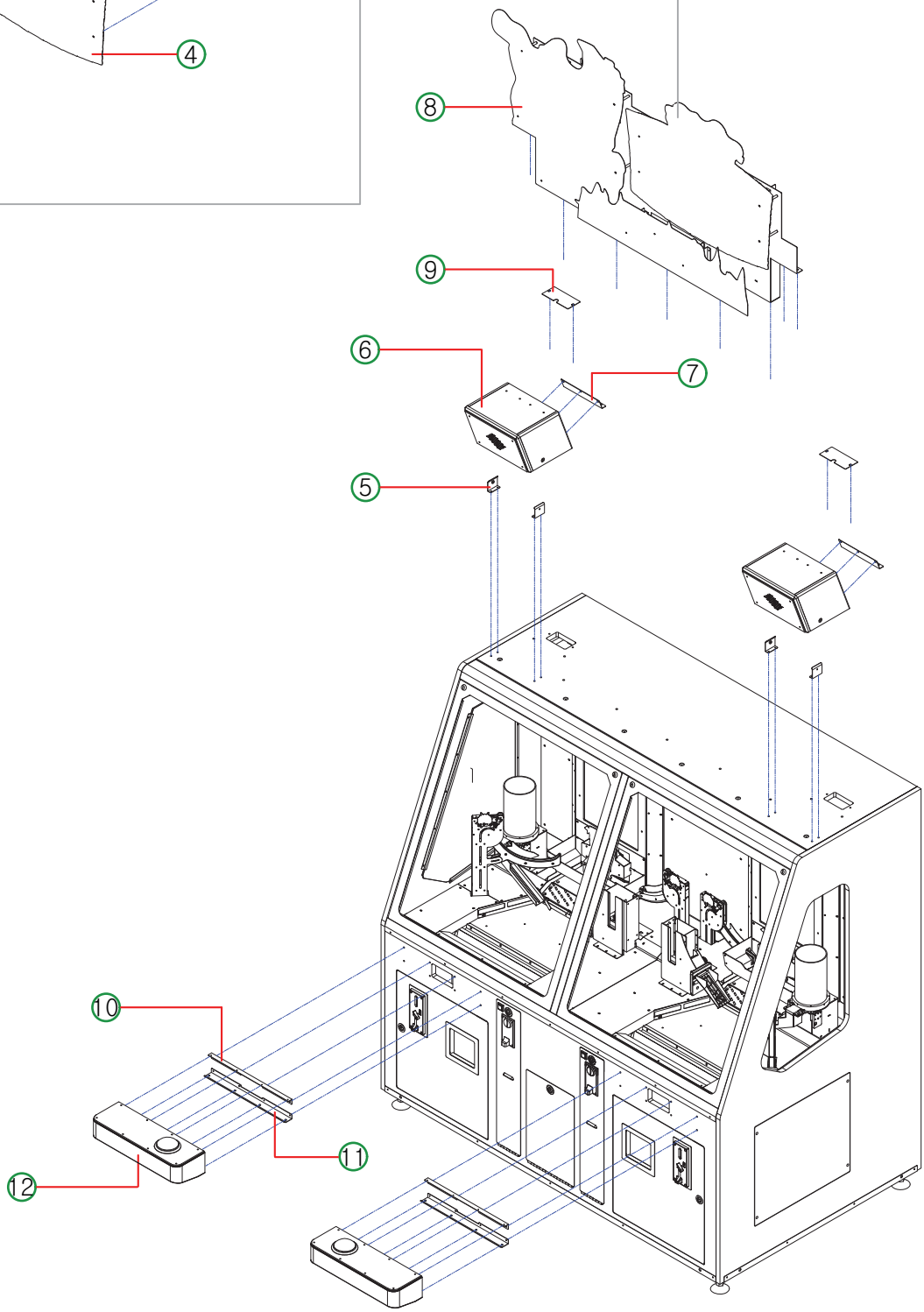

3. SETUP SETTING

3-1. MACHINE SETUP

1.SETUP BUTTON LAYOUT

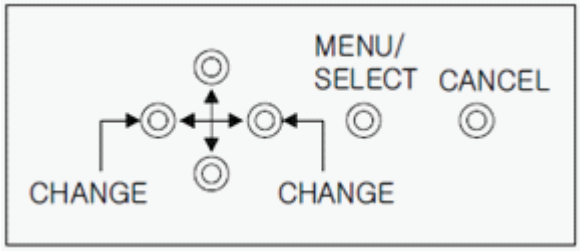	1) [↑ ↓] UP/DOWN KEY : MENU UP/DOWN MOVE 2) [← →] LEFT/RIGHT KEY : CHANGE SETTING MENU 3) MENU/SELECT KEY : SET UP MENU MODE, SELECT PERFORM 4) CANCEL KEY : EXIT
 1P SERVICE / RESET 2P SERVICE / RESET	NORMALLY SERVICE IN, ON ERROR, USE TO CLEAR ERROR. * 10 PLAYS PER 1 SERVICE IN

[OPERATION MENU]

PRESS MENU BUTTON. [MENU/SELECT BUTTON : TO ENTER]	
# OPERATING OPTIONS #	
PROGRAM SETTINGS	SETUP MODE
CLEAR MODE	DELETE MODE
BOOKKEEPING DATA	VIEW GAME DATA
FACTORY SETTING	INITIALIZING TO FACTORY SETTING
TEST MODE	TEST MODE
EXIT	EXIT TO OPERATION OPTIONS

3-2. PROGRAM SETTING

PROGRAM SETTINGS			
LCD DISPLAY	DESCRIPTION	RANGE	DEFAULT
PLAYS / COIN [- > SUB MENU]	- SELECT COIN OR CARD USE AND FREE PLAY - SET PLAYS(CREDITS) PER COIN. (IN CASE OF USING COIN OR SWIPE CARD STRAIGHTLY, DIFFERENT CREDITS ARE PAID ACCORDING TO THE NUMBER OF CONTINUOUS USE)	=> (SUB MENU) (REFER TO TABLE #1 BELOW)	
PAYOUT SETTING [- > SUB MENU]	MOVE TO DETAILED SETTING ITEMS FOR PAYOUT. - SETTING PRESET TYPE - SETTING GAME SCORE - SETTING CARD, CHIP DISPENSING	=> (SUB MENU) (REFER TO TABLE #2 BELOW)	
RFID CHIP SET [- > SUB MENU]	SETTING RFID CHIP INPUT - RFID CHIP TYPE (PAYMENT) - RFID CHIP VALUE CAUTION! NO CHANGE IN VALUE AGAINST FACTORY SETTING	=> (SUB MENU) (REFER TO TABLE #3 BELOW)	
ELEVATOR SETTING [- > SUB MENU]	DETAILED SETTING FOR BALL SHOOTING ELEVATOR OPERATION (SET TIMING FOR MOTOR STOP AFTER BALL SHOOTING) CAUTION! NO CHANGE IN VALUE AGAINST FACTORY SETTING	=> (SUB MENU) (REFER TO TABLE #4 BELOW)	
MERCY PER SHOT	IF THERE IS ANY SETTING VALUE AT MERCY TICKET BELOW, MERCY TICKET WILL BE DISPENSED REGARDLESS OF GAME RESULTS WHEN BALLS ARE SHOT AS MANY AS SET FROM MAIN SHOOTER. Ex) WHEN SETTING MERCY PER SHOT 2 & MERCY TICKET 1, ONE TICKET DISPENSES PER TWO SHOTS FROM MAIN SHOOTER	0 ~ 10	0
MERCY TICKET	IF CONDITIONS AT MERCY PER SHOT ABOVE ARE SATISFIED, MERCY TICKET DISPENSES	0 ~ 20	0
TICKET/SCORE	SET TICKET RATIO PER SCORE. NONE : NO TICKET OUT, REDUCE TICKET COUNT AUTOMATICALLY	"NONE", "1/1", "1/2"	1/1
ATTRACT VOLUME	USE DEMO SOUND AND SET VOLUME "OFF" : NO SOUND 10 ~ 100 : SOUND VOLUME	"OFF" , 10 ~ 100 (INCREASED BY 10UNITS)	60
SAVE AND EXIT	SAVE AND EXIT	SELECT [YES] OR [NO], PERFORM	
CANCEL AND EXIT	CANCEL AND EXIT		

〈TABLE #1〉

PROGRAM SETTINGS -> PLAYS / COIN

- SET PLAYS(CREDITS) PER COIN OR SWIPE
  WHEN SWIPING THE CARD IN SEQUENCE FOR 5 TIMES WITHOUT PLAYING,
  CREDITS WILL BE INCREASED AS BELOW. FROM 6TH TIMES,
  1ST COIN VALUE WILL BE APPLIED AGAIN (STANDARD: 5 TIMES)

LCD DISPLAY	DESCRIPTION	RANGE	VALUE
PAYMENT TYPE	SELECT A PHRASE BETWEEN INSERT COIN OR SWIPE CARD AT FREE PLAY SETTING AND DISPLAY MONITOR "FREE" - FREE PLAY "COINS" - INSERT COIN "CARD" - SWIPE CARD	"FREE" "COINS" "CARD"	"COIN"
MININUM COIN	SET MINIMUM NUMBER OF COIN INPUT TO PLAY TO BE APPLIED TO FOLLOWING SETTING VALUE. EX) INCASE OF SETTING AS MININUM COIN 5 IN CASE 5 COIN INSERT,1 PLAY PROVIDE AS 1st. COIN VALUE	1 ~ 9 (INCREMENT BY 1UNIT)	1
1st. COIN	SET NO OF PLAYS PERINSERTED COIN	1 ~ 300 (INCREMENT BY 1UNIT)	8
2nd. COIN	SET NO OF PLAYS PERINSERTED COIN		17
3rd. COIN	SET NO OF PLAYS PERINSERTED COIN		27
4th. COIN	SET NO OF PLAYS PERINSERTED COIN		38
5th. COIN	SET NO OF PLAYS PERINSERTED COIN		50
SAVE AND EXIT	SAVE AND EXIT (NO CHANGE AGAINST FACTORY SETTING)	SELECT [YES] OR [NO], PERFORM	
CANCEL AND EXIT	CANCEL AND EXIT		

〈TABLE #2〉

PROGRAM SETTINGS -> PAYOUT SETTING - SET THE VALUE OF BONUS BALL, TICKET, CARD, CHIP RELATED WITH PAYOUT			
LCD DISPLAY	DESCRIPTION	RANGE	VALUE
PRESET TYPE	TYPES OF INTERNALLY PRE-FIXED BASIC SETTING VALUE 〈FOR FIXED SETTING VALUE, REFER TO #2-1 BELOW〉 CAUTION! WHEN CHAGING PRESET VALUE, THE WHOLE DATA INCLUDING INTERNAL BOOKKEEPING WILL BE DELETED. (AUTOMATICALLY CLEAR DATA)	A1 ~ A5 B1 ~ B5	B4
BASIC SCORE TYPE	SET TYPE OF SCORE OF TREASURE BOX AT MAIN CHECKER	1 ~ 3	2
SPIN SCORE TYPE	SET TYPE OF DISPENSE AT BONUS SPIN GAME	A1~A3,B1~B3	B3
SPIN STEP MAX	MAXIMUM NUMBER OF STEP REQUIRED TO PROCEED BONUS SPIN GAME	5 ~ 15	10
CHIP OUT / BALLS	ONE CHIP WILL BE DISPENSED WHEN BALLS ARE SHOOT AS MANY AS SET NUMBER INCLUDING MAIN SHOOTER BALL AND BONUS BALL	0 ~ 500	110
CARD OUT / BALLS	ONE CARD WILL BE DISPENSED WHEN BALLS ARE SHOOT AS MANY AS SET NUMBER INCLUDING MAIN SHOOTER BALL AND BONUS BALL	0 ~ 500	190
BIGWIN SCORE	SET BIG WIN SCORE AT BONUS SPIN GAME	SET 100 ~ BIGWIN LIMIT (INCREMENT BY 10 UNIT)	500
BIGWIN ADD / BALL	REFERENCE NUMBER OF BALLS OF MAIN SHOOTER TO INCREASE BIGWIN SCORE (BIGWIN SCORE GOES UP AS MUCH AS SET IN BIGWIN INCREMENT WHEN BALLS ARE SHOT AS MANY AS SET HERE)	(0 ~ 10) (INCREMENT BY 1 UNIT)	0
BIGWIN INCREMENT	BIGWIN INCREMENT SCORE (IF BIGWIN ADD/BALL IS SET “0”, BIGWIN IS INCREASED AGAINST SETTING VALUE OF BIGWIN INCREMENT)	(0 ~ 50) (INCREMENT BY 1 UNIT)	0
BIGWIN LIMIT	LIMIT BIGWIN SCORE (MAX ACCUMULATIVE SCORE)	100 ~ 9999 (INCREMENT BY 50 UNIT)	2000
SUPER BONUS	FND SCORE FOR SUPER BONUS (SCORE WHEN COLLECTING ALL 9 CARDS)	100 ~ 9999 (INCREMENT BY 100 UNIT)	2000
SAVE AND EXIT	SAVE AND EXIT	SELECT [YES] OR [NO], PERFORM	
CANCEL AND EXIT	CANCEL AND EXIT		

〈TABLE #2-1〉 PAYOUT SETTINGS -> PRESET TYPE SET TABLE

PRESET TYPE TABLE - REFERENCE TABLE FOR INTERNALLY SET FIXED VALUE PER EACH PRESET TYPE		
PRESET TYPE A1	BASIC SCORE TYPE	1
	SPIN SCORE TYPE	A1
	CHIP OUT / BALLS	60
	CARD OUT / BALLS	100
	BIGWIN SCORE	300
PRESET TYPE A2	BASIC SCORE TYPE	1
	SPIN SCORE TYPE	A2
	CHIP OUT / BALLS	60
	CARD OUT / BALLS	100
	BIGWIN SCORE	400
PRESET TYPE A3	BASIC SCORE TYPE	2
	SPIN SCORE TYPE	A2
	CHIP OUT / BALLS	60
	CARD OUT / BALLS	100
	BIGWIN SCORE	400
PRESET TYPE A4	BASIC SCORE TYPE	2
	SPIN SCORE TYPE	A3
	CHIP OUT / BALLS	60
	CARD OUT / BALLS	100
	BIGWIN SCORE	500
PRESET TYPE A5	BASIC SCORE TYPE	3
	SPIN SCORE TYPE	A3
	CHIP OUT / BALLS	60
	CARD OUT / BALLS	100
	BIGWIN SCORE	500

PRESET TYPE B1	BASIC SCORE TYPE	1
	SPIN SCORE TYPE	B1
	CHIP OUT / BALLS	175
	CARD OUT / BALLS	500
	BIGWIN SCORE	300
PRESET TYPE B2	BASIC SCORE TYPE	1
	SPIN SCORE TYPE	B2
	CHIP OUT / BALLS	150
	CARD OUT / BALLS	300
	BIGWIN SCORE	400
PRESET TYPE B3	BASIC SCORE TYPE	1
	SPIN SCORE TYPE	B2
	CHIP OUT / BALLS	125
	CARD OUT / BALLS	250
	BIGWIN SCORE	400
PRESET TYPE B4	BASIC SCORE TYPE	1
	SPIN SCORE TYPE	B3
	CHIP OUT / BALLS	110
	CARD OUT / BALLS	190
	BIGWIN SCORE	500
PRESET TYPE B5	BASIC SCORE TYPE	1
	SPIN SCORE TYPE	B3
	CHIP OUT / BALLS	100
	CARD OUT / BALLS	180
	BIGWIN SCORE	500

- SCORE TABLE OF MAIN SCORE TYPE (CHECKER GAME)	
MAIN SCORE TYPE ((B) STANDS FOR BONUS BALL, (T) STANDS FOR BONUS TICKET)	
MAIN SCORE TYPE 1	(B)3, (T)1, (B)2, (T)2, (B)1, (T)3, (B)2, (T)2, (B)3, (T)1, (B)2, (T)2, (B)1, (T)3, (B)2, (T)2
MAIN SCORE TYPE 2	(B)4, (T)4, (B)3, (T)2, (B)2, (T)4, (B)3, (T)2, (B)4, (T)4, (B)3, (T)2, (B)2, (T)4, (B)3, (T)2
MAIN SCORE TYPE 3	(B)5, (T)2, (B)4, (T)4, (B)3, (T)6, (B)4, (T)4, (B)5, (T)2, (B)4, (T)4, (B)3, (T)6, (B)4, (T)4
- SCORE TABLE OF BONUS SCORE TYPE (BONUS REEL GAME)	
BONUS SCORE TYPE ((B) STANDS FOR BONUS BALL, (T) STANDS FOR BONUS TICKET)	
BONUS SCORE TYPE A1	BIGWIN, (B)15, (B)20, (B)10, (T)50, (B)15, (B)25, (B)10 (T)100, (B)15, (B)20, (B)10, (T)50, (B)15, (B)25, (B)10
BONUS SCORE TYPE A1	BIGWIN, (B)20, (B)30, (B)15, (T)70, (B)20, (B)40, (B)15 (T)150, (B)20, (B)30, (B)15, (T)70, (B)20, (B)40, (B)15
BONUS SCORE TYPE A1	BIGWIN, (B)30, (B)40, (B)20, (T)100, (B)30, (B)50, (B)20 (T)200, (B)30, (B)40, (B)20, (T)100, (B)30, (B)50, (B)20
BONUS SCORE TYPE ((B) STANDS FOR BONUS BALL, (T) STANDS FOR BONUS TICKET), (CA) STANDS FOR CARD, (CH) STANDS FOR CHIP)	
BONUS SCORE TYPE B1	BIGWIN, (CH)1, (B)35, (CA)2, (T)40, (CH)2, (B)45, (CA)1 (T)100, (CH)1, (B)55, (CA)1, (T)60, (CH)2, (B)25, (CA)1
BONUS SCORE TYPE B1	BIGWIN, (CH)1, (B)55, (CA)2, (T)60, (CH)2, (B)70, (CA)1 (T)150, (CH)1, (B)85, (CA)1, (T)90, (CH)2, (B)40, (CA)1
BONUS SCORE TYPE B1	BIGWIN, (CH)1, (B)70, (CA)2, (T)80, (CH)2, (B)90, (CA)1 (T)200, (CH)1, (B)110, (CA)1, (T)120, (CH)2, (B)50, (CA)1

〈TABLE #3〉

PROGRAM SETTINGS -> RFID CHIP SET - SETTING FOR RFID CHIP INPUT			
LCD DISPLAY	DESCRIPTION	RANGE	VALUE
CHIP TYPE	SET PROCESSING METHOD FOR INPUT CHIPS "PLAYS" - PROCESSAS PLAY AND INCREASE PLAYS "TICKET" - PROCESS AS TICKET AND DISPENSE TICKETS CHIP VALUE INCREASES FOUR TIMES WHEN CHANGING TO TICKET IN A STATE OF PLAYS BUT DECREASES FOUR TIMES WHEN CHANGING TO PLAYS IN A STATE OF TICKET.	"PLAYS", "TICKET"	PLAYS
CHIP-EN TIME	IN DEMO MODE AFTER GAMEPLAY IS OVER, THE OPERATION OF CHIP SELECTOR IS RESTRICTED AFTER SET TIME IF THERE IS A SET TIME VALUE. (IT WORKS AGAIN WHEN A NEW CREDIT IS INPUT) “OFF”: NO RESTRICTION PROCESS “10s~300s”: RESTRICT OPERATION OFTER SET TIME IN DEMO MODE.	“OFF” 10s ~ 300s (UNIT SECOND)	60s

1. BLACK	SETTING FOR BLACK COLOR CHIP VALUE	PLAYS: 0 ~ 200 TICKET: 0 ~ 800	15
2. RED	SETTING FOR RED COLOR CHIP VALUE		10
3. BLUE	SETTING FOR BLUE COLOR CHIP VALUE (WHEN SETTING CHIP TYPE AS TICKET AND IF DEFAULT VALUE OF BLUE CHIP IS 7, TICKET VALUE IS 30 AND THE OTHER VALUE (OTHER THAN 7) INCREASES FOUR TIMES)		7
4. PURPLE	SETTING FOR PURPLE COLOR CHIP VALUE		5
5. GREEN	SETTING FOR GREEN COLOR CHIP VALUE		3
6. YELLOW	SETTING FOR YELLOW COLOR CHIP VALUE		2
SAVE AND EXIT	SAVE AND EXIT (NO CHANGE IN SAVED DATA AGAINST FACTORY SETTING)	SELECT [YES] OR [NO], PERFORM	
CANCEL AND EXIT	CANCEL AND EXIT		

<TABLE #4>

PROGRAM SETTINGS -> ELEVATOR SETTING

- DETAILED SETTING FOR MOTOR STOP TIMING AFTER SHOOTING MAIN AND BONUS BALL
- DUE TO DEVIATION IN MOTOR OF MAIN BALL SHOOTER AND BONUS BALL SHOOTER, MOTOR STOPS AFTER MORE ROTATING FOR SET TIME TO ADJUST TIMING FOR NEXT BALL MOUNTING AFTER SHOOTING

※ BALL WILL BE SHOOTED BY PRESSING SELECT OR SHOOTING BUTTON

LCD DISPLAY	DESCRIPTION	RANGE	VALUE
SHOOTER 1P	DETAILED SETTING FOR BALL SHOOTING OF 1P MAIN SHOOTER CONTROL MOTOR MOVEMENT AFTER BALL SHOOTING (CONTROL BY 0.01 SEC)	"0.00" : STOP IMMEDIATELY "0.00" ~ "0.30" (BY 0.02 SEC UNIT)	0.16
SHOOTER 2P	DETAILED SETTING FOR BALL SHOOTING OF 2P MAIN SHOOTER CONTROL MOTOR MOVEMENT AFTER BALL SHOOTING (CONTROL BY 0.01 SEC)		
BNS BALL 1P	DETAILED SETTING FOR BALL SHOOTING OF 1P BONUS BALL CONTROL MOTOR MOVEMENT AFTER BALL SHOOTING (CONTROL BY 0.01 SEC)		
BNS BALL 2P	DETAILED SETTING FOR BALL SHOOTING OF 2P BONUS BALL CONTROL MOTOR MOVEMENT AFTER BALL SHOOTING (CONTROL BY 0.01 SEC)		
SAVE AND EXIT	SAVE AND EXIT (NO CHANGE IN SAVED DATA AGAINST FACTORY SETTING)	SELECT [YES] OR [NO], PERFORM	
CANCEL AND EXIT	CANCEL AND EXIT		

3-3. CLEAR MODE

CLEAR MODE - GAME DATA AND BOOKKEEPING DATA CAN BE DELETED		
LCD DISPLAY	DESCRIPTION	PERFORM
CLEAR TICKETS	DELETE CURRENT TICKETS TO BE DISPENSED	PRESS SELECT BUTTON SELECT [YES] OR [NO], PERFORM
CLEAR PLAYS	DELETE REMAINING PLAYS (CREDITS) AND BONUS BALL (DELETE CARD AND CHIPTO BE DISPENSED)	
CLEAR DATA	DELETE BOTH GAME DATA AND BOOKKEEPING DELETE ALL (GAME DATA INCLUDING CREDIT, TICKET AND ETC)	
EXIT	EXIT	

BOOKKEEPING	
LCD DISPLAY 1P : 1 PLAYER 2P : 2 PLAYER TOTAL : 1P AND 2P	DESCRIPTION
-- COIN IN -- 1P : 0 2P : 0 TOTAL : 0	NUMBER OF COIN IN FOR 1P, 2P EACH AND TOTAL
-- SERVICE IN -- 1P : 0 2P : 0 TOTAL : 0	NUMBER OF SERVICE IN AND PLAYS INPUT FOR 1P, 2P EACH AND TOTAL (SERVICE BUTTON INCREASES BY 10 PLAYS)
-- GAME PLAY SHOT -- 1P : 0 2P : 0 TOTAL : 0	NUMBER OF MAIN SHOOTER BALL SHOOTING AT GAME PLAY (1P, 2P AND TOTAL)
--- BONUS BALL SHOT -- 1P : 0 2P : 0 TOTAL : 0	NUMBER OF BONUS BALL SHOOTING AT GAME PLAY (1P, 2P AND TOTAL)
-- TICKET OUT -- 1P : 0 2P : 0 TOTAL : 0	NUMBER OF DISPENSED TICKETS AT GAME PLAY (1P, 2P AND TOTAL)
-- CHECKER GOAL IN -- MOVE / STOP 1P : 0, 0.0% 2P : 0, 0.0%	DISPLAY OF CHECKER SUCCESS PERCENTAGE OF EACH PLAYER (1P, 2P) NUMBER OF CHECKER SUCCESS,PERCENTAGE OF CHECKER SUCCESS(1P) NUMBER OF CHECKER SUCCESS,PERCENTAGE OF CHECKER SUCCESS(2P)

-- CARD OUT -- 1P : 0 2P : 0 TOTAL : 0	NUMBER OF DISPENSED CARDS (1P, 2P AND TOTAL)
-- CHIP OUT -- 1P : 0 2P : 0 TOTAL : 0	NUMBER OF DISPENSED CHIPS (1P, 2P AND TOTAL)
-- BASIC GAME TICKET -- 1P : 0 2P : 0 TOTAL : 0	TICKET SCORE GAINED AT DEFAULT CHECK GAME (1P, 2P AND TOTAL)
-- BASIC GAME BALL -- 1P : 0 2P : 0 TOTAL : 0	NUMBER OF BONUS BALL GAINED AT DEFAULT CHECKER GAME (1P,2P AND TOTAL)
-- SPIN GAME COUNT -- 1P : 0 2P : 0 TOTAL : 0	NUMBER OF SPIN BONUS GAME (1P, 2P AND TOTAL)
-- SPIN GAME TICKET -- 1P : 0 2P : 0 TOTAL : 0	TICKET SCORE GAINED AT SPIN BONUS GAME (1P, 2P AND TOTAL)
-- SPIN GAME BALL -- 1P : 0 2P : 0 TOTAL : 0	NUMBER OF BONUS BALL GAINED SPIN BONUS GAME (1P, 2P AND TOTAL)
-- SPIN GAME BIG WIN -- 1P : 0 2P : 0 TOTAL : 0	NUMBER OF BIG WIN SUCCESS AT SPIN BONUS GAME (1P, 2P AND TOTAL)
-- RFID CHIP IN -- 1P : 0 2P : 0 TOTAL : 0	NUMBER OF BIG WIN SUCCESS AT SPIN BONUS GAME (1P, 2P AND TOTAL)
-- RFID CHIP VALUE -- 1P : 0 2P : 0 TOTAL : 0	RFID CHIP VALUE (PLAYS OR TICKET) (1P, 2P AND TOTAL)

** VER INFO 1 ** INT Ver 0.xx MK Ver 0.xx, pxx	VERSION INFORMATION 1 - MAIN BOARD PROGRAM VERSION - MK (PC) PROGRAM VERSION
** VER INFO 2 ** SERIAL HUB : 01 RFID IO : 000, 000 CHECKER : 000, 000	VERSION INFORMATION 2 (INFORMATION ON EACH SENSOR FIRMWARE VERSION) - SERIAL HUB FIRMWARE VERSION - RFID CHIP IO MODULE FIRMWARE VERSION FOR 1P, 2P - MAIN CHECKERSENSOR FIRMWARE VERSION FOR 1P, 2P
CANCEL BUTTON : EXIT	

- **FACTORY-SETTING**
  INITIALIZE TO FACTORY SETTING (CLEAR ALL DATA AND SET BASIC VALUE OF GAME SET UP)

★ SCORE TYPE AND ELEVATOR SETTING ARE NOT INITIALIZED AGAINST FACTORY SETTING

LCD DISPLAY (PERFORM)		LCD DISPLAY (PERFORM)
FACTORY-SETTING ARE YOU SURE? YES or[NO] PERFORM BY MOVING THE CURSER	RECONFIRM	**FACTORY-SETTING** REALLY ? YES or[NO] PERFORM BY MOVING THE CURSER

3-4. TEST MODE

TEST MODE		
TEST ITEMS	SET UP ITEMS	DESCRIPTION
INPUT TEST	[=>]	ENTER INTO CHECK MODE OF INPUT STATUS 1P GAME BTN, 2P GAME BTN 1P COIN SEN, 2P COIN SEN 1P TICKET BTN, 2P TICKET BTN, 1P TICKET SEN, 2P TICKET SEN, 1P SERVICE, 2P SERVICE, SETUP UP, DOWN, LEFT, RIGHT, SELECT, CANCEL BUTTON
FND & LAMP	"OFF" "STEP" "ON" "ON/OFF"	LAMP, FND, LED OPERATION TEST WHEN PRESSING SELECT BUTTON, IT PERFORMS EACH STAGE - TOTALLY OFF - DISPLAY IN SEQUENCE : LAMP → FND → LED - TOTALLY ON - REPEATION ON / OFF TO TALLY
MOT PUSHER	"ALL" "1P" "2P"	MAIN PUSHER MOTOR MOVING TEST ◎ SELECT A PLAYER BY PRESSING LEFT, RIGHT BUTTON AND THEN PRESS SELECT BUTTON TO START (OR WITH SHOOTING BUTTONFOR 1P,2P, IT OPERATES ON, OFF RESPECTIVELY) DISPLAY SUPER BONUS FND 4DIGIT SENSOR STATUS FND [■□□□] : 1P DISPLAY OF ENCORDER SENSOR STATUS (0 or 1) FND [□■□□] : 1P DISPLAY OF ENCORDER SENSOR CHECK COUNT(0 ~ 9) FND [□□■□] : 2P DISPLAY OF ENCORDER SENSOR STATUS(0 or 1) FND [□□□■] : 2P DISPLAY OF ENCORDER SENSOR CHECK COUNT (0 ~ 9) [DISPLAY ITEMS AT SETUP LCD] 1P, 2P ENC: DISPLAY OF ENCORDER SENSOR STATUS AND NUMBER OF SENSOR CHECK COUNT
MOT CHECKER	"ALL" "1P" "2P"	MAIN CHECKER MOTOR OPERATION TEST ◎ SELECT A PLAYER BY PRESSING LEFT, RIGHT BUTTON AND THEN PRESS SELECT BUTTON TO START (OR WITH SHOOTING BUTTON FOR 1P, 2P, IT OPERATES ON, OFF RESPECTIVELY) DISPLAY SUPER BONUS FND 4DIGIT SENSOR STATUS FND [■□□□] : 1P STARTING POINT ENCORDER SENSOR CHECK COUNT (0 ~ 9) FND [□■□□] : 1P DIVIDED POINTS ENCORDER SENSOR CHECK COUNT (0 ~ 9) FND [□□■□] : 2P STARTING POINT ENCORDER SENSOR CHECK COUNT (0 ~ 9) FND [□□□■] : 2P DIVIDED POINTS ENCORDER SENSOR CHECK COUNT (0 ~ 9) ※ WHEN CHECKER SENSOR IS SENSED, CHECKER LED LIGHTS BLUE [DISPLAY ITEMS AT SETUP LCD] DISPLAY OF CHECKER MOTOR ENCORDER STARTING POINT, DIVIDED POINT, NUMBER OF DIVIDED POINT CHECK COUNT

MOT SHOOTER	"ALL" "1P" "2P"	MAIN BALL SHOOTER OPERATION TEST ◎ SELECT A PLAYER BY PRESSING LEFT, RIGHT BUTTON AND THEN PRESS SELECT BUTTON TO START (OR WITH SHOOTING BUTTON FOR 1P, 2P, IT OPERATES ON, OFF RESPECTIVELY) DISPLAY SUPER BONUS FND 4DIGIT SENSOR STATUS FND [■□□□] : 1P SHOOTER, DISPLAY OF UPPER BALL DISPENSING SENSOR STATUS(0 or 1) FND [□■□□] : 1P SHOOTER,LOWER ENCORDER SENSOR CHECK COUNT (0 ~ 9) FND [□□■□] : 2P SHOOTER,DISPLAY OF UPPER BALL DISPENSING SENSOR STATUS(0 or 1) FND [□□□■] : 2P SHOOTER, LOWER ENCORDER SENSOR CHECK COUNT (0 ~ 9) DISPLAY OF MONITOR LEFT/RIGHT LED COLOR (1P, 2P IN OPPOSITE DIRECTION) 1P LEFT LED : RED ON → MAIN SHOOTER BALL EMPTY SENSOR SIGNAL 1P RIGHT LED : GREEN ON → BONUS BALL EMPTY SENSOR SIGNAL 2P LEFT LED : GREEN ON → BONUS BALL EMPTY SENSOR SIGNAL 2P RIGHT LED : RED ON → MAIN SHOOTER BALL EMPTY SENSOR SIGNAL [DISPLAY ITEMS AT SETUP LCD] 1P, 2P SEN : STATUS OF BALL ELEVATOR UPPER SENSOR OF MAIN SHOOTER 1P, 2P ENC : STATUS OF LOWER ENCORDER SENSOR OF MAIN SHOOTER 1P, 2P EMPTY: STATUS OF BALL CHECKING SENSOR FOR BALL BOX OF MAIN SHOOTER (0 - NO BALL, 1 - FULL OF BALLS)
MOT BNS BALL	"ALL" "1P" "2P"	BONUS BALL SHOOTER OPERATION TEST ◎ SELECT A PLAYER BY PRESSING LEFT, RIGHT BUTTON AND THEN PRESS SELECT BUTTON TO START (OR WITH SHOOTING BUTTON FOR 1P, 2P, IT OPERATES ON, OFF RESPECTIVELY) DISPLAY SUPER BONUS FND 4DIGIT SENSOR STATUS FND [■□□□] : 1P BONUS BALL, DISPLAY OF UPPER BALL DISPENSING SENSOR STATUS(0 or 1) FND [□■□□] : 1P BONUS BALL, LOWER ENCORDER SENSOR CHECK COUNT (0 ~ 9) FND [□□■□] : 2P BONUS BALL, DISPLAY UPPER BALL DISPENSING SENSOR STATUS(0 or 1) FND [□□□■] : 2P BONUS BALL, LOWER ENCORDER SENSOR CHECK (0 ~ 9)

MOT BNS BALL		DISPLAY OF MONITOR LEFT/RIGHT LED COLOR (1P, 2PIN OPPOSITE DIRECTION) 1P LEFT LED : RED ON → MAIN SHOOTER BALL EMPTY SENSOR SIGNAL 1P RIGHT LED : GREEN ON → BONUS BALL EMPTY SENSOR SIGNAL 2P LEFT LED : GREEN ON → BONUS BALL EMPTY SENSOR SIGNAL 2P RIGHT LED : RED ON → MAIN SHOOTER BALL EMPTY SENSOR SIGNAL [DISPLAY ITEMS AT SETUP LCD] 1P, 2P SEN : STATUS OF UPPER SENSOR OF BONUS BALL ELEVATOR 1P, 2P ENC : STATUS OF LOWER ENCORDER SENSOR OF BONUS BALL ELEVATOR 1P, 2P EMPTY : STATUS OF BALL CHECKING SENSOR FOR BALL BOX OF BONUS BALL ELEVATOR
MOT CIRC ELEV	"ALL" "1P" "2P"	INTERNAL BALL CIRCULATON ELEVATOR MOVING TEST ◎ SELECT A PLAYER BY PRESSING LEFT, RIGHT BUTTON AND THEN PRESS SELECT BUTTON TO START (OR WITH SHOOTING BUTTON FOR 1P, 2P, IT OPERATES ON, OFF RESPECTIVELY) DISPLAY SUPER BONUS FND 4DIGIT SENSOR STATUS FND [□■□□] : 1P ENCORDER SENSOR CEHCK COUNT(0 ~ 9) FND [□□□■] : 2P ENCORDER SENSOR CEHCKCOUNT (0 ~ 9) DISPLAY OF MONITOR LEFT/RIGHT LED COLOR (1P, 2PIN OPPOSITE DIRECTION) 1P LEFT LED : RED ON → MAIN SHOOTER BALL EMPTY SENSOR SIGNAL 1P RIGHT LED : GREEN ON → BONUS BALL EMPTY SENSOR SIGNAL 2P LEFT LED : GREEN ON → BONUS BALL EMPTY SENSOR SIGNAL 2P RIGHT LED : RED ON → MAIN SHOOTER BALL EMPTY SENSOR SIGNAL [DISPLAY ITEMS AT SETUP LCD] 1P, 2P ENC : STATUS OF INTERNAL BALL CIRCULATION ELEVATOR ENCORDER
MOT CIRC BRID	"ALL" "1P" "2P"	OPERATION TEST OF MOTOR FOR INTERNAL BALL CIRCULATION SUPPLY DIRECTION ◎ SELECT A PLAYER BY PRESSING LEFT, RIGHT BUTTON AND THEN PRESS SELECT BUTTON TO START (OR WITH SHOOTING BUTTON FOR 1P, 2P, IT OPERATES ON, OFF RESPECTIVELY)

MOT CIRC BRID		DISPLAY SUPER BONUS FND 4DIGIT SENSOR STATUS FND [□■□□] : 1P DISPLAY OF BRIDGE POSITION SENSOR STATUS (0 - NO SENSOR SIGNAL, 1 - MAIN SHOOTER POSITION, 2 - BONUS BALL POSITION) FND [□□□■] : 1P DISPLAY OF BRIDGE POSITION SENSOR STATUS (0 - NO SENSOR SIGNAL, 1 - MAIN SHOOTER POSITION, 2 - BONUS BALL POSITION) DISPLAY MONITOR LEFT/RIGHT LED COLOR (1P, 2P OPPOSITE DIRECTION) 1P LEFT LED : RED ON → MIAN SHOOTER BALL EMPTY SENSOR SIGNAL 1P RIGHT LED : GREEN ON → BONUS BALL EMPTY SENSOR SIGNAL 2P LEFT LED : GREEN ON → BONUS BALL EMPTY SENSOR SIGNAL 2P RIGHT LED : RED ON → MAIN SHOOTER BALL EMPTY SENSOR SIGNAL [DISPLAY ITEMS AT SETUP LCD] 1P, 2P SHOT : STATUS OF INTERNAL BALL CIRCULATION - SUPPLY MOTOR AND DIRECTION SENSOR OF MAIN SHOOTER 1P, 2P BNS : STATUS OF INTERNAL BALL CIRCULATION - SUPPLY MOTOR AND DIRECTION SENSOR OF BONUS BALL ELEVATOR
CARD DISPENS	"ALL" "1P" "2P"	CARD DISPENSER OPERATION TEST ◎ SELECT A PLAYER BY PRESSING LEFT, RIGHT BUTTON AND THEN PRESS SELECT BUTTON TO START (OR WITH SHOOTING BUTTON FOR 1P, 2P, IT OPERATES ON, OFF RESPECTIVELY DISPLAY SUPER BONUS FND 4DIGIT SENSOR STATUS FND [■□□□] :1P DISPLAY OF CARD DISPENSER OPERATION FND [□■□□] :1P DISPLAY OF CARD OUT QUANTITY FND [□□■□] :2P DISPLAY OF CARD DISPENSER OPERATION FND [□□□■] :2P DISPLAY OF CARD OUT QUANTITY [DISPLAY ITEMS AT SETUP LCD] 1P, 2P CARD OUT : DISPLAY OF CARD DISPENSING STATUS (SENSOR STATUS, NUMBER OF DISPENSED CARDS, NUMBER OF RE-TRIAL TO DISPENSE CARDS)
CHIP HOPPER	"ALL" "1P" "2P"	CHIP HOPPER OPERATION TEST ◎ SELECT A PLAYER BY PRESSING LEFT, RIGHT BUTTON AND THEN PRESS SELECT BUTTON TO START (OR WITH SHOOTING BUTTON FOR 1P, 2P, IT OPERATES ON, OFF RESPECTIVELY)

CHIP HOPPER		DISPLAY SUPER BONUS FND 4DIGIT SENSOR STATUS FND [■□□□] : 1P DISPLAY OF CHIP HOPPER OPERATION FND [□■□□] : 1P DISPLAY OF CHIP OUT QUANTITY FND [□□■□] : 2P DISPLAY OF CHIP HOPPER OPERATION FND [□□□■] : 2P DISPLAY OF CHIP OUT QUANTITY [DISPLAY ITEMS AT SETUP LCD] 1P, 2P CHIP OUT : STATUS OF CHIP DISPENSING (SENSOR STATUS, NUMBER OF DISPENSED CHIPS, NUMBER OF RE-TRIAL TO DISPENSE CHIPS)
RFID CHIP IO	[=>]	RFID CHIP IO MODULE TEST ◎ SELECT A PLAYER BY PRESSING LEFT, RIGHT IN MODE AND PRESS SELECT BUTTON TO TEST [DISPLAY ITEMS AT SETUP LCD] MODE : “ALL OFF” : TOTAL CHIP SELECTOR OFF “ALL ON” : TOTAL CHIP SELECTOR ON “1P OFF” : 1P CHIP SELECTOR OFF “1P ON” : 1P CHIP SELECTOR ON “2P OFF” : 2P CHIP SELECTOR OFF “2P ON“ : 2P CHIP SELECTOR ON 1P SEPARATE DISPLAY (OFF, ON, CHIP ID COLOR, STORE CODE, ERROR AND ETC) 2P SEPARATE DISPLAY (OFF, ON, CHIP ID COLOR, STORE CODE, ERROR AND ETC) ※ WHEN CHIP SELECTOR IS NOT CONNECTED ‘NOT FOUND’ IS DISPLAYED
COIN	“OFF” “ON”	COIN OPERATION TEST ◎ WHEN PRESSING SELECT BUTTON, 1P AND 2P ON/OFF OPERATES TOGETHER (WHEN PRESSING SHOOTING BUTTON OF 1P/2P, IT OPERATES SEPARATELY) [DISPLAY ITEMS AT SETUP] COIN 0 0 (DISPLAY OF COIN SENSOR CHECK COUNT 1P, 2P)
TICKET	“ALL” “1P” “2P”	TICKET DISPENSER OPERATION TEST(DISPENSING 3 TICKETS) ◎ SELECT A TYPE BY PRESSING LEFT, RIGHT BUTTON AND PRESS SELECT BUTTON TO TEST (WHEN PRESSING SHOOTING BUTTON OF 1P/2P, IT OPERATES SEPARATELY) [DISPLAY ITEMS AT SETUP LCD] TICKET 0 0 (DISPLAY OF TICKET COUNT TO BE DISPENSED FOR 1P, 2P)

COUNTER	“COIN” “TICKET” “CHIP”	COUNTER TEST ◎ SELECT A TYPE BY PRESSING LEFT, RIGHT BUTTON AND PRESS SELECT BUTTON TO TEST (WHEN PRESSING SHOOTING BUTTON OF 1P/2P, IT OPERATES SEPARATELY)
SOUND	“OFF” “CH” “PLAY”	SOUND TEST ◎ SELECT THE TYPE BY PRESSING LEFT, RIGHT BUTTON AND PRESS SELECT BUTTON TO TEST (PLAY, STOP) - STOP SOUND PLAY - TEST OF EACH SPEAKER (1P LEFT, 2P RIGHT) - PLAY TOTAL SOUND
SCREEN	"OFF" "GRID" "COLOR" "RED" "GREEN" "BLUE" "WHITE"	VIDEO MONITOR SCREEN TEST ◎ SELECT BY PRESSING LEFT, RIGHT BUTTON, PRESS SELECT BUTTON TO TEST EACH ITEM IN SEQUENCE. - MONITOR SCREEN : IDLE STATUS - MONITOR SCREEN : GRID TEST - MONITOR SCREEN : DISPLAY OF COLORS - MONITOR SCREEN : DISPLAY OF RED COLOR - MONITOR SCREEN : DISPLAY OF GREEN COLOR - MONITOR SCREEN : DISPLAY OF BLUE COLOR - MONITOR SCREEN : DISPLAY OF WHITE COLOR
EXIT		END OF TEST MODE (EXIT TO OPERATING OPTIONS)

3-5. ERROR CODE

"E.02", "E.03", "E.21" MAKE MACHINE STOP ANDTHE OTHER ERROR MAKES ONLY RELATED PLAYER STOP THE GAME. "TICKET ERROR", "CARD DISPENSOR ERROR" JUST DISPLAYS ERROR ONLY WITHOUT STOPPING THE GAME

ERROR CODE	CONTENTS	DESCRIPTION	CHECK
E.02	SYSTEM	PROBLEM AT SET-UP DATA SAVING	1. CHECK SET-UP AND SAVE 2. FASTORY SETTING 3. POWER ON, OFF 4. IF PROBLEM NOT SOLVED, REPLACE MAIN BOARD
E.03		PROBLEM AT GAME DATA SAVING	1. CLEAR DATA AT CLEAR MODE 2. POWER ON, OFF 3. IF PROBLEM NOT SOLVED, REPLACE MAIN BOARD
E.11	COIN SELECTOR	COIN SENSOR SIGNAL CONTINUES	CHECK COIN SENSOR INPUT
E.21	MK(PC) SERIAL COMMUNICATION	COMMUNICATION PROBLEM BETWEEN DISPLAY MONITOR AND MK (PC). COMMUNICATION ERROR CAN NOT BE CONTROLLED IN DISPLAY MONITOR. VIDEO ERROR IS TREATED SEPARATELY AND MAIN BOARD IS AT FND	1. CHECK WIRING CONNECTION 2. CHECK BOOTING MK(PC) 3. CHECK COMMUNICATION OF MAIN BOARD
E.31	MAIN CHECKER MOTOR	NO SIGNAL FROM DIVIDED ENCORDER	1. CHECK MOTOR OPERATION 2. CHECK ENCORDER SENSOR INPUT STATUS
E.35		CHECKER SENSOR PROBLEM (SIGNAL CONTINUES)	1. CHECK WIRING CONNECTION 2. CHECK SENSOR INPUT STATUS
E.41	PUSHER MOTOR	PUSHER MOTOR FUNCTION PROBLEM	1. CHECK MOTOR FUNCTION STATUS 2. CHECK ENCORDER SENSOR INPUT STATUS
E51	BONUS BALL SHOOTING MOTOR	BONUS BALL SHOOTING BALL JAM PROBLEM	1. CHECK BALL JAMMING 2. CHECK ENCORDER SENSOR INPUT STATUS
E52		NO BONUS BALL OR SENSOR PROBLEM	1. CHECK BALL PRESENCE 2. CHECK UPPER SENSOR INPUT STATUS

E.61	MAIN BALL SHOOTING MOTOR	SHOOTING BALL JAM PROBLEM	1. CHECK BALL JAMMING 2. CHECK ENCORDER SENSOR INPUT STATUS
E.62		NO SHOOTING BALL OR SENSOR PROBLEM	1. CHECK BALL PRESENCE 2. CHECK UPPER SENSOR INPUT STATUS
E.71	INTERNAL BALL CIRCULATION DEVICE	INTERNAL BALL CIRCULATION ELEVATOR MOTOR PROBLEM	1. CHECK MOTOR OPERATION 2. CHECK ENCORDER SENSOR INPUT STATUS
E.72		PROBLEM OF BALL POSITION MOTOR AT INTERNAL BALL CIRCULATION SYSTEM	1. CHECK MOTOR OPERATION 2. CHECK POSITION SENSOR INPUT STATUS
E.81 (CARD EMPTY)	CARD DISPENSER	NO CARD OR CARD DISPENSER WORKING PROBLEM DISPLAY CARD EMPTY IN 1ST ERROR AND CARD ERROR FROM 2ND ERROR	1. CHECK CARD PRESENCE 2. CHECK CARD DISPENSER OPERATION
E.82 (CHIP EMPTY)	CHIP HOPPER	NO CHIP OR CHIP HOPPER WORKING PROBLEM DISPLAY CHIP EMPTY IN 1ST ERROR AND CHIP ERROR FROM 2ND ERROR	1. CHECK CHIP PRESENCE 2. CHECK CHIP HOPPER FUNCTION
HELP (IN VIDEO TICKET WINDOW)	TICKET	NO TICKET	1. CHECK TICKET PRESENCE 2. CHECK TICKET MOTOR FUNCTION 3. CHECK TICKET DISPENSING SENSOR
!CHECK RFID IO	RFID IO PROBLEM		

※ BASICALLY ERROR CODE IS DISPLAYED IN SETUP LCD AND PLAYER'S MONITOR.
IN CASE ERROR HAPPENS BOTH AT 1P AND 2P, ERROR CODE IS DISPLAYED AT SUPER BONUS FND AND PLAYER'S MONITOR. BOTH "Er" and ERROR CODE ARE DISPLAYED.

3-6. ERROR CODE ERROR DETECTION METHOD

ERROR CODE	CONTENTS	DESCRIPTION	CHECK
E.02	SYSTEM	SET-UP DATA SAVING PROBLEM	POWER ON, CHECK BACK UP MEMORY IN MAIN BOARD SET-UP
E.03		GAME SAVING DATA PROBLEM	POWER ON, CHECK BACK UP MEMORY IN MAIN BOARD SET-UP
E.11	COIN SELECTOR	PLAYER COIN SENSOR SIGNAL CONTINUES	SIGNAL CONTINUES OVER 2 SEC WHILE INHIBIT IS ON
E.21	MK(PC) SERIAL COMMUNICATION	COMMUNICATION PROBLEM BETWEEN DISPLAY MONITOR AND MK (PC). COMMUNICATION ERROR CAN NOT BE CONTROLLED IN DISPLAY MONITOR. VIDEO ERROR IS TREATED SEPARATELY AND MAIN BOARD IS AT FND	1. BEFORE MK BOOTING : ERROR IF NO SIGNAL FOR 1 MIN 2. AFTER MK BOOTING (MAIN BOOT FINISHED) : ERROR IF NO SIGNAL FOR 30 SEC, (10 TIMES SIGNAL AT 3 SEC INTERVAL)
E.31	MAIN CHECKER MOTOR	NO SIGNAL FROM DIVIDED POINTS ENCORDER	IF NO SIGNAL OVER 1 SEC, TRY REVERSE ROTATION AND FORWARD ROTATION. REPEAT 3 TIMES. IF STILL THE SAME THEN ERROR
E.35		CHECKER SENSOR PROBLEM (CONTINUED SIGNAL)	SIGNAL CONTINUES FOR OVER 3 SEC
E.41	PUSHER MOTOR	PUSHER MOTOR OPERATION PROBLEM	NO SIGNAL FROM ENCORDER FOR OVER 1 SEC
E51	BONUS BALL SHOOTING MOTOR	BONUS BALL, SHOOTING BALL JAM PROBLEM	IF NO SIGNAL OVER 2 SEC FROM ENCORDER, TRY REVERSE AND FORWARD ROTATION 3 TIMES. IF STILL THE SAME, THEN ERROR
E52		NO BONUS BALL OR SENSOR PROBLEM	NO SIGNAL FROM UPPER SENSOR WHILE DISPENSING BALL 8 TIMES AT AN INTERVAL OF 3 SEC
E.61	MAIN BALL SHOOTING MOTOR	SHOOTING BALL JAM PROBLEM	TRY REVERSE ROTATION IF NO SIGNAL OVER 2 SEC AND FORWARD ROTATION. REPEAT 3 TIMES
E.62		NO BALL OR SENSOR ERROR	NO SENSOR SIGNAL FROM UPPER SENSOR WHILE DISPENSING 8 BALLS AT AN INTERVAL OF 3 SEC

E.71	INTERNAL BALL CIRCULATION SYSTEM	INTERNAL BALL CIRCULATION ELEVATOR MOTOR PROBLEM	IF NO ENCORDER SIGNAL OVER 1 SEC, TRY REVERSE AND FORWARD ROTATION 3 TIMES. IF STILL NO SIGNAL, IT'S AN ERROR
E.72		BALL SUPPLY MOTOR PROBLEM AT INTERNAL BALL CIRCULATION SYSTEM	IF NO POSITION SENSOR SIGNAL FOR 3 SEC DURING MOTOR OPERATION, TRY REVERSE ROTATION 2 TIMES. IF STILL NO SIGNAL. IT'S AN ERROR
E.81 (CARD EMPTY)	CARD DISPENSER	NO CARD OR CARD DISPENSER FUNCTION PROBLEM 1ST ERROR IS DISPLAYED AS CARD EMPTY AT MONITOR AND THEN CARD ERROR IF CARD IS STILL NOT DISPENSED	IF NO SENSOR SIGNAL WHILE CARD DISPENSOR IS BEING OPERATED, IT'S AN ERROR EVEN AFTER RE-TRYING 3 TIMES
E.82 (CHIP EMPTY)	CHIP HOPPER	NO CHIP OR CHIP HOPPER FUNCTION PROBLEM 1ST ERROR IS DISPLAYED AS CHIP EMPTY AT MONITOR WHEN THERE IS NO CHIP AND THEN CHIP ERROR IF CHIP IS STILL NOT DISPENSED	IF NO SENSOR SIGNAL FOR OVER 2 SEC WHILE CHIP HOPPER IS BEING OPERATED, RE-TRY AFTER WAITING 0.5 SEC. IT'S AN ERROR IF THERE IS NO SIGNAL AFTER RETRYING 5 TIMES
HELP (IN VIDEO TICKET WINDOW)	TICKET	NO TICKET	

4. TROUBLESHOOTING

* General check up : Check the supply voltage and wiring connection properly
* "NO" : Means faulty of the check up result.

4-1. SERIAL COMMUNICATION ERROR [E.21]
- IN CASE OF SERIAL COMMUNICATION PROBLEM BETWEEN MAIN PCB AND MK(PC)

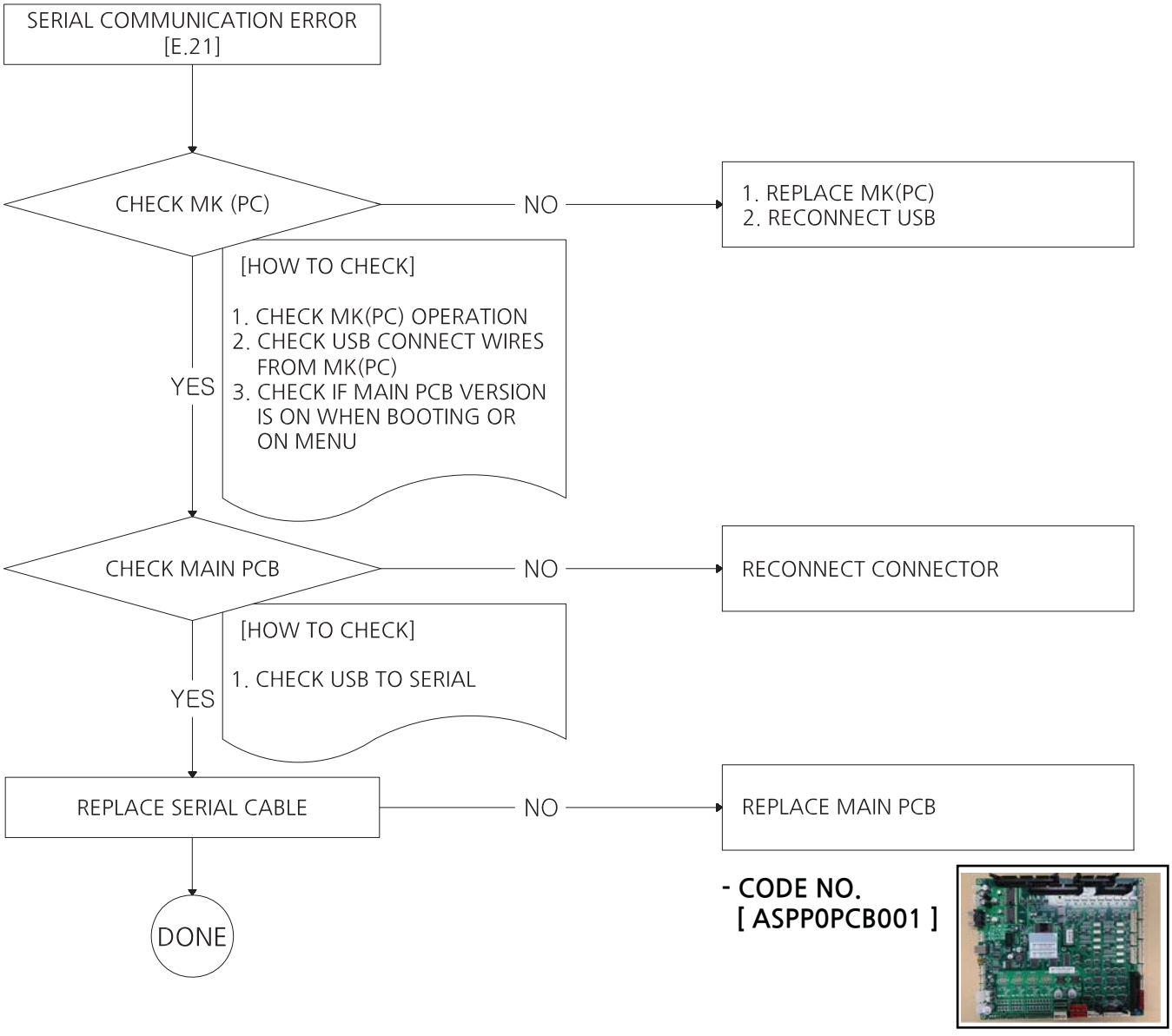

- CODE NO.
  [ASPP0PCB001]

* General check up : Check the supply voltage and wiring connection properly
* "NO" : Means faulty of the check up result.

4-2. MAIN CHECKER MOTOR ERROR [E.31]
- IN CASE OF MOTOR PROBLEM

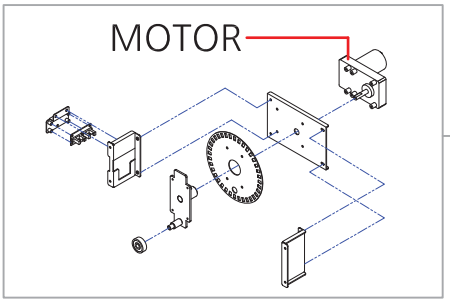

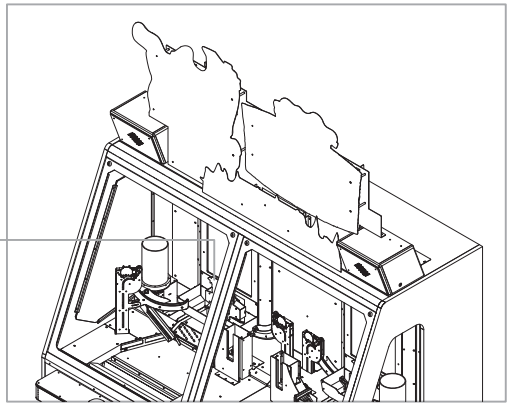

MAIN CHECK MOTOR ERROR [E.31]

MOTOR TEST
- YES → DONE
- NO →

[HOW TO TEST]

1. TEST MODE > MOT CHECKER
2. ON/OFF BY SELECT BUTTON OR 1,2P BALL SHOOTING BUTTON
3. USE ANALOG TESTER ONLY WHEN YOU CHECK DC VOLTAGE AT MOT CHECKER

CHECK MAIN CHECKER MOTOR
- NO →
  1. RECONNECT CONNECTOR
  2. REASSEMBLE OR REPLACE
  3. REMOVE DEBRIS OR BALLS
- YES →

[HOW TO CHECK]

1. CHECK MOTOR CONNECTOR
2. CHECK IF MOTOR OR BOLT IS FIXED IN PLACE
3. CHECK DEBRIS OR BALLS INSIDE

CHECK MAIN PCB
- NO →
  1. RECONNECT CONNECTOR
  2. REPLACE MAIN PCB
- YES →

[HOW TO CHECK]

1. CHECK CONNECTOR CN23
2. CHECK DC VOLTAGE OF CONNECTOR CN23 WHEN MOTOR IS ON
   1P) CHECK IF 6V ON PIN 1,2
   2P) CHECK IF 6V ON PIN 3,4
3. CHECK JOIN CONNECTOR

REPLACE MAIN CHECKER MOTOR

NO

REPLACE MAIN PCB

DONE

- CODE NO.
[MZZZ0MOT141]

- CODE NO.
[ASPP0PCB001]

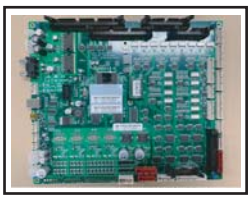

* General check up : Check the supply voltage and wiring connection properly
* "NO" : Means faulty of the check up result.

4-3. MAIN CHECKER MOTOR ERROR [E.31] - IN CASE OF NO SIGNAL FROM ENCODER

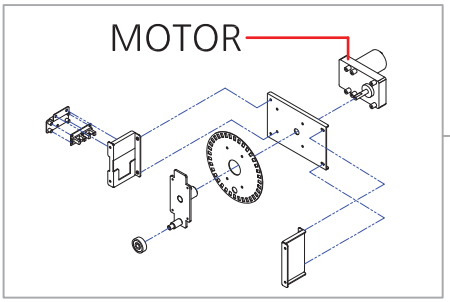

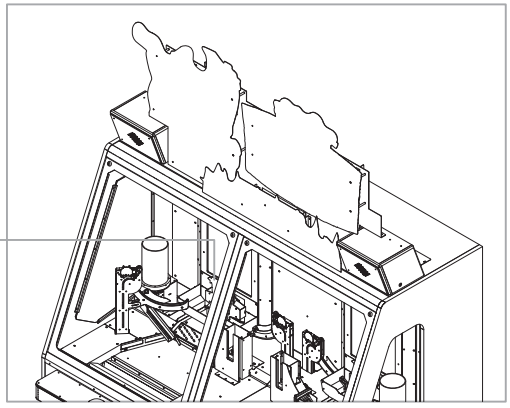

MAIN CHECKER MOTOR ERROR [E.31]

ENCODER SENSOR TEST — YES → DONE

NO

[HOW TO TEST]

1. TEST MODE > MOT CHECKER
2. ON/OFF BY SELECT BUTTON OR 1,2P BALL SHOOTING BUTTON
3. CHECK SUPER BONUS FND DISPLAY
   FND [■□□□] 1P DATUM POINT STATUS
   FND [□■□□] 1P EQUINOTIAL POINT STATUS
   FND [□□■□] 2P DATUM POINT STATUS
   FND [□□□■] 2P EQUINOTIAL POINT STATUS
4. CHECK DC VOLTAGE FROM INPUT TEST

CHECK ENCODER SENSOR — NO →

1. RECONNECT CONNECTOR
2. REMOVE DEBRIS ON SENSOR
3. ADJUST POSITION OF SENSOR AND BRACKET

YES

[HOW TO CHECK]

1. CHECK SENSOR CONNECTOR
2. CHECK IF THERE IS DEBRIS ON SENSOR OR BRACKET
3. CHECK THE POSITION OF ENCODER SENSOR AND BRACKET

CHECK MAIN PCB — NO →

1. RECONNECT CONNECTOR
2. REPLACE MAIN PCB

YES

[HOW TO CEHCK]

1. CHECK CONNECTOR CN27
2. CHECK DC VOLTAGE OF CONNECTOR CN 27
   1P) CN27_A PIN 1 : 5V, PIN 2 :0.1V, PIN 5 : GND
   2P) CN27_B PIN 1 : 5V, PIN 2 : 0.1V, PIN 5 : GND
3. CHECK JOIN CONNECTOR

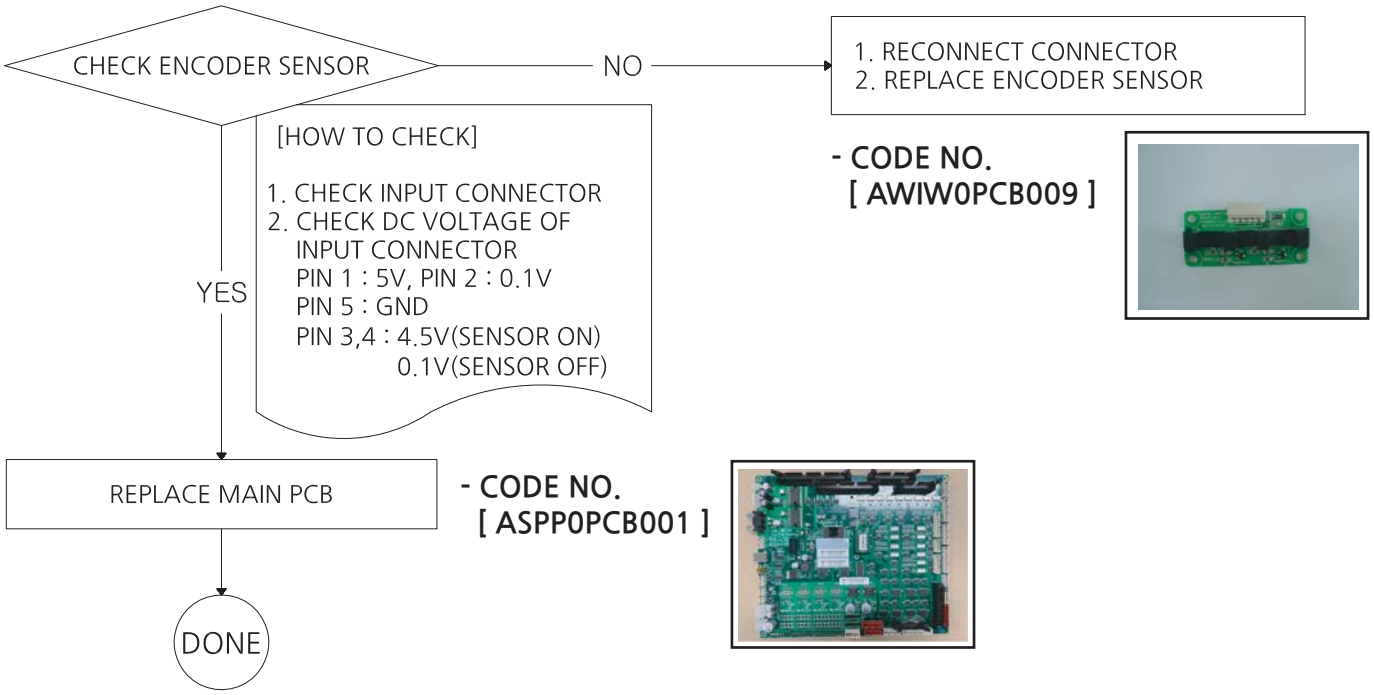
CHECK ENCODER SENSOR
NO
1. RECONNECT CONNECTOR
2. REPLACE ENCODER SENSOR
- CODE NO.
[AWIW0PCB009]
[HOW TO CHECK]
1. CHECK INPUT CONNECTOR
2. CHECK DC VOLTAGE OF
INPUT CONNECTOR
PIN 1 : 5V, PIN 2 : 0.1V
PIN 5 : GND
PIN 3,4 : 4.5V(SENSOR ON)
0.1V(SENSOR OFF)
YES
REPLACE MAIN PCB
- CODE NO.
[ASPP0PCB001]
DONE

* General check up : Check the supply voltage and wiring connection properly
* "NO" : Means faulty of the check up result.

4-4. MAIN CHECKER SENSOR ERROR [E.35] (BONUS TARGET SENSOR PCB) - SIGNAL OF CHECKER SENSOR KEEPS ON

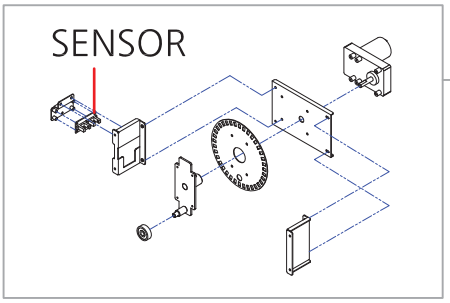

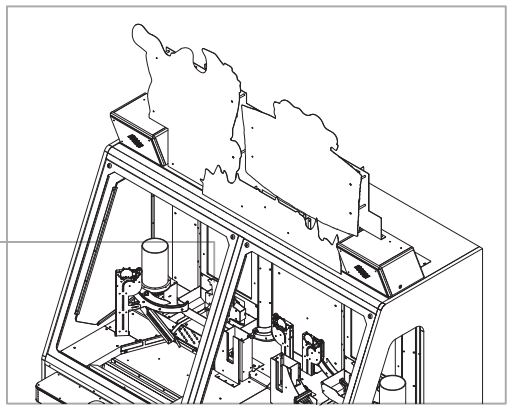

MAIN CHECKER SENSOR ERROR [E.35]

TEST MAIN CHECKER SENSOR
- YES → DONE
- NO →

[HOW TO TEST]

1. TEST MODE > MOT CHECKER
2. ON/OFF BY SELECT BUTTON OR 1,2P BALL SHOOTING BUTTON
3. CHECK IF CHECKER LED IS ON WHEN BALL IS SHOT
4. CHECK DC VOLTAGE FROM INPUT TEST

CHECK MAIN CHECKER SENSOR
- NO →
  1. RECONNECT CONNECTOR
  2. REMOVE DEBRIS ON SENSOR
  3. ADJUST POSITION OF SENSOR
  4. REMOVE BALLS
- YES →

[HOW TO CHECK]

1. CHECK CONNECTOR
2. CHECK SENSOR (DEBRIS OR ANGLE)
3. CHECK IF BALLS ARE INSIDE OF CHECKER

CHECK MAIN PCB
- NO →
  1. RECONNECT CONNECTOR
  2. REPLACE MAIN PCB
- YES →

[HOW TO CEHCK]

1. CHECK CONNECTOR CN27
2. CHECK DC VOLTAGE OF CONNECTOR CN 27
   1P) CN27_A PIN 6 : 5V, PIN 7 :0.1V, PIN 9 : GND
   2P) CN27_B PIN 6 : 5V, PIN 7 : 0.1V, PIN 9 : GND
3. CHECK JOIN CONNECTOR

* General check up : Check the supply voltage and wiring connection properly
* "NO" : Means faulty of the check up result.

4-5. PUSHER MOTOR ERROR [E.41]
- IN CASE OF MOTOR PROBLEM

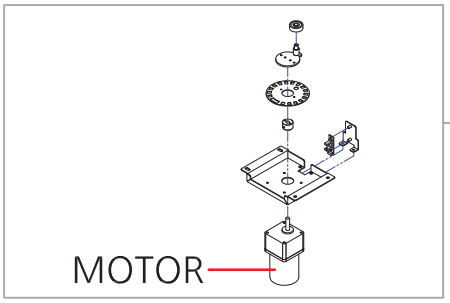

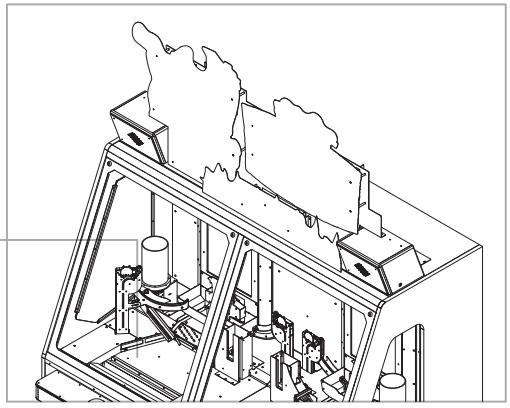

PUSHER MOTOR ERROR [E.41]

TEST PUSHER MOTOR
- YES → DONE
- NO →

[HOW TO TEST]

1. TEST MODE > MOT PUSHER
2. ON/OFF BY SELECT BUTTON OR 1,2P BALL SHOOTING BUTTON
3. USE ANALOG TESTER ONLY WHEN YOU CHECK DC VOLTAGE AT MOT PUSHER

CHECK PUSHER MOTOR
- NO →
  1. RECONNECT CONNECTOR
  2. REASSEMBLE OR REPLACE
- YES →

[HOW TO CHECK]

1. CHECK MOTOR CONNECTOR
2. CHECK IF MOTOR OR BOLT IS FIXED IN PLACE
3. CHECK CONNECTOR OF AC MOTOR CONDENSER
4. CHECK JOIN CONNECTOR

CHECK MAIN PCB
- NO →
  1. RECONNECT CONNECTOR
  2. REPLACE MAIN PCB
- YES →

[HOW TO CEHCK]

1. CHECK CONNECTOR CN18
2. CHECK DC VOLTAGE OF CONNECTOR CN 18 WHEN MOTOR IS ON
   1P) CHECK IF 12V ON PIN 1,2
   2P) CHECK IF 12V ON PIN 7,8

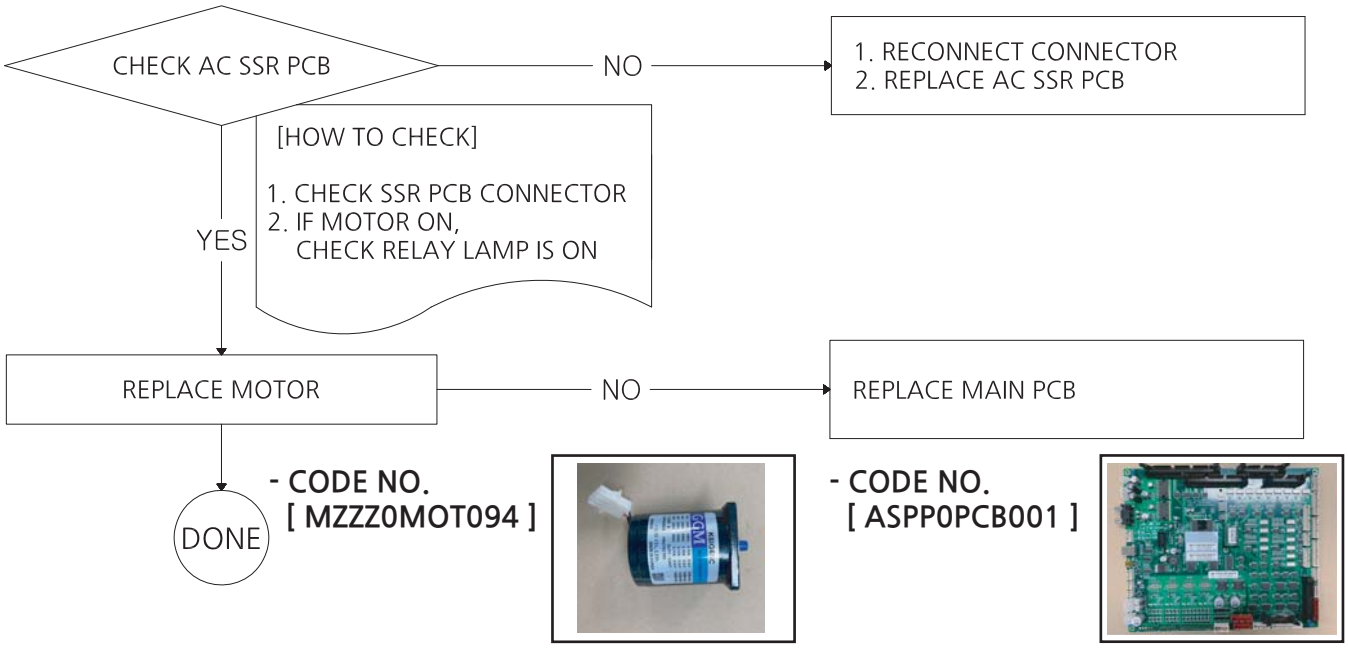
CHECK AC SSR PCB
NO
1. RECONNECT CONNECTOR
2. REPLACE AC SSR PCB
[HOW TO CHECK]
1. CHECK SSR PCB CONNECTOR
2. IF MOTOR ON,
CHECK RELAY LAMP IS ON
YES
REPLACE MOTOR
NO
REPLACE MAIN PCB
DONE
- CODE NO.
[MZZZ0MOT094]
- CODE NO.
[ASPP0PCB001]

* General check up : Check the supply voltage and wiring connection properly
* "NO" : Means faulty of the check up result.

4-6. PUSHER SENSOR ERROR [E.41]
- IN CASE OF SENSOR PROBLEM

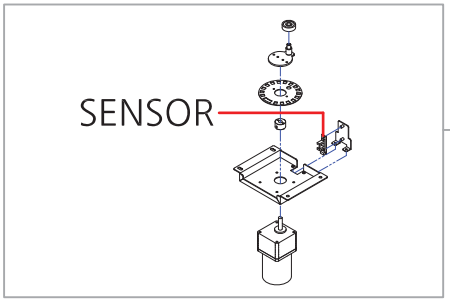

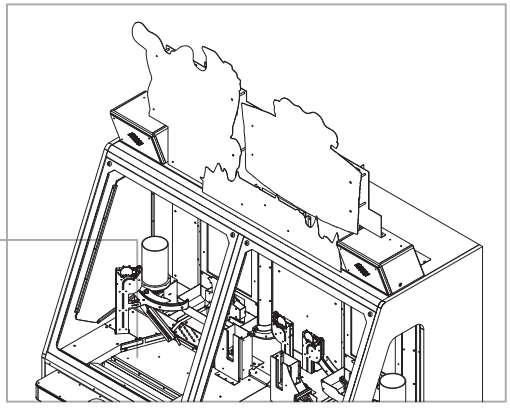

PUSHER SENSOR ERROR [E.41]

TEST PUSHER MOTOR — YES → DONE

NO

[HOW TO TEST]

1. TEST MODE > MOT PUSHER
2. ON/OFF BY SELECT BUTTON OR 1,2P BALL SHOOTING BUTTON
3. CHECK SUPER BONUS FND DISPLAY
   FND [■□□□] 1P SENSOR STATUS (0,1)
   FND [□□■□] 2P SENSOR STATUS (0,1)
4. CHECK DC VOLTAGE FROM INPUT TEST

CHECK PUSHER ENCODER SENSOR PCB — NO →

1. RECONNECT CONNECTOR
2. REMOVE DEBRIS ON SENSOR
3. ADJUST POSITION OF SENSOR AND BRACKET

YES

[HOW TO CHECK]

1. CHECK SENSOR CONNECTOR
2. CHECK IF THERE IS DEBRIS ON SENSOR OR BRACKET
3. CHECK THE POSITION OF ENCODER SENSOR AND BRACKET

CHECK MAIN PCB — NO →

1. RECONNECT CONNECTOR
2. REPLACE MAIN PCB

YES

[HOW TO CEHCK]

1. CHECK CONNECTOR CN18
2. CHECK DC VOLTAGE OF CONNECTOR CN 18
   1P) PIN 3 : 5V, PIN 4 : 0.1V
   PIN 6 : GND
   2P) PIN 9 : 5V, PIN 10 : 0.1V
   PIN 12 : GND
3. CHECK JOIN CONNECTOR

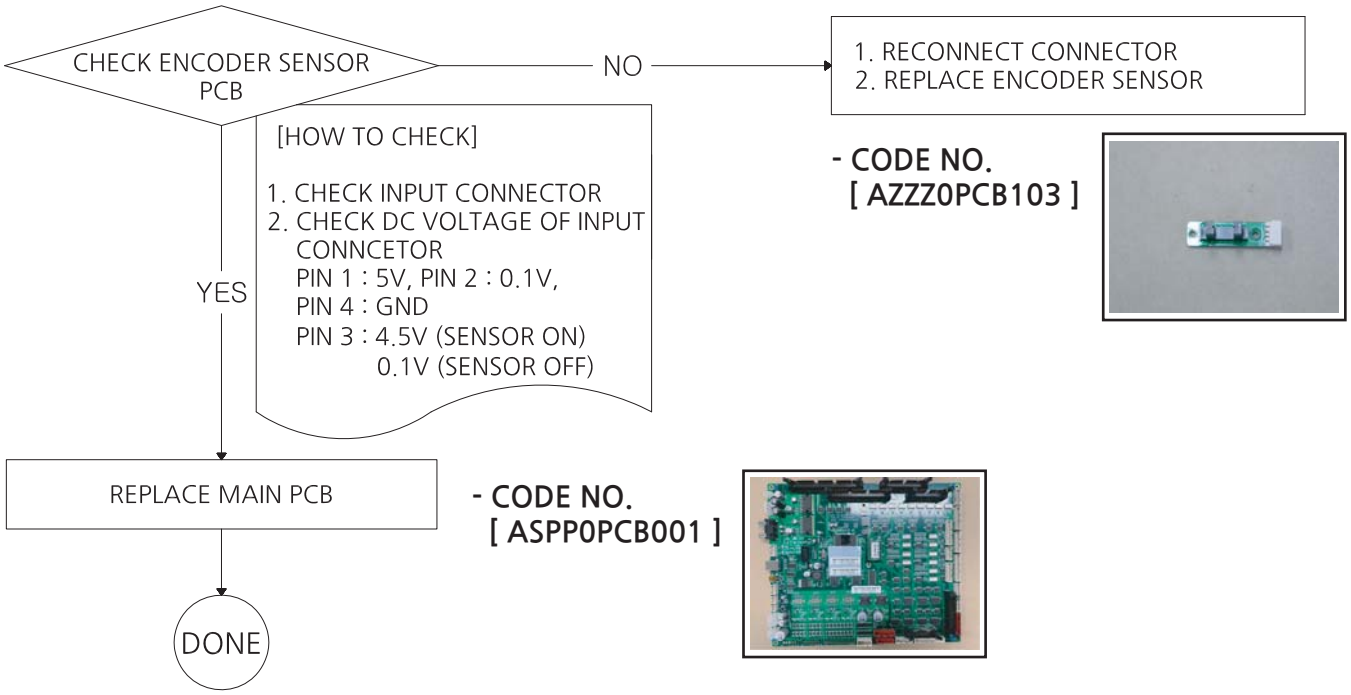
CHECK ENCODER SENSOR PCB
NO
1. RECONNECT CONNECTOR
2. REPLACE ENCODER SENSOR
- CODE NO.
[AZZZ0PCB103]
[HOW TO CHECK]
1. CHECK INPUT CONNECTOR
2. CHECK DC VOLTAGE OF INPUT CONNCETOR
PIN 1 : 5V, PIN 2 : 0.1V,
PIN 4 : GND
PIN 3 : 4.5V (SENSOR ON)
0.1V (SENSOR OFF)
YES
REPLACE MAIN PCB
- CODE NO.
[ASPP0PCB001]
DONE

* General check up : Check the supply voltage and wiring connection properly
* "NO" : Means faulty of the check up result.

4-7. BONUS BALL SHOOTING MOTOR ERROR [E.51] - IN CASE MOTOR IS NOT WORKING

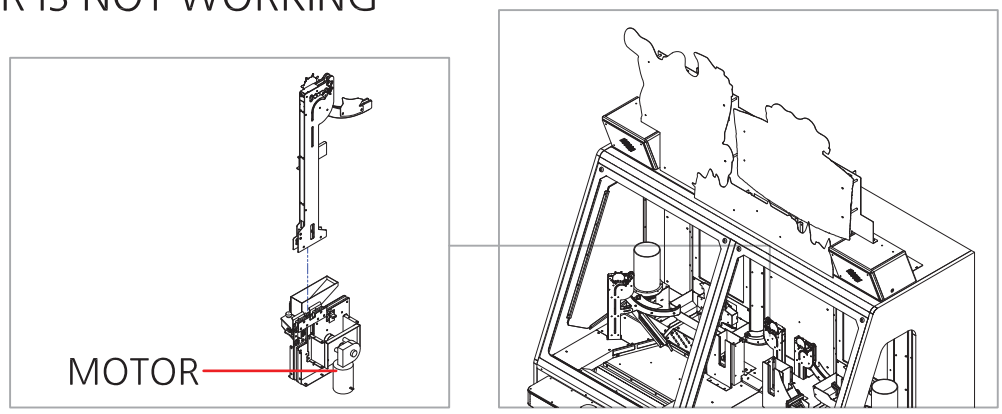

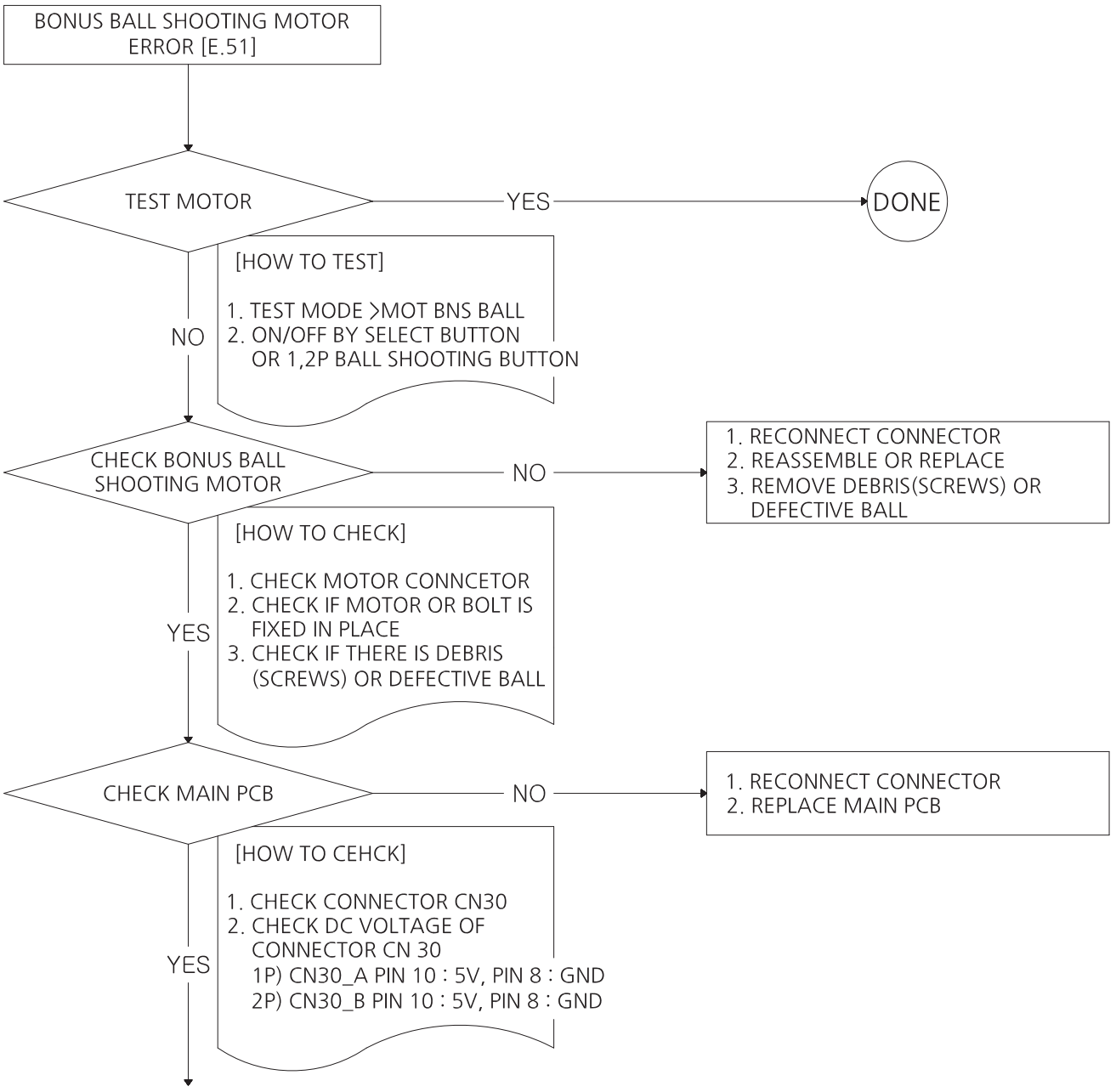

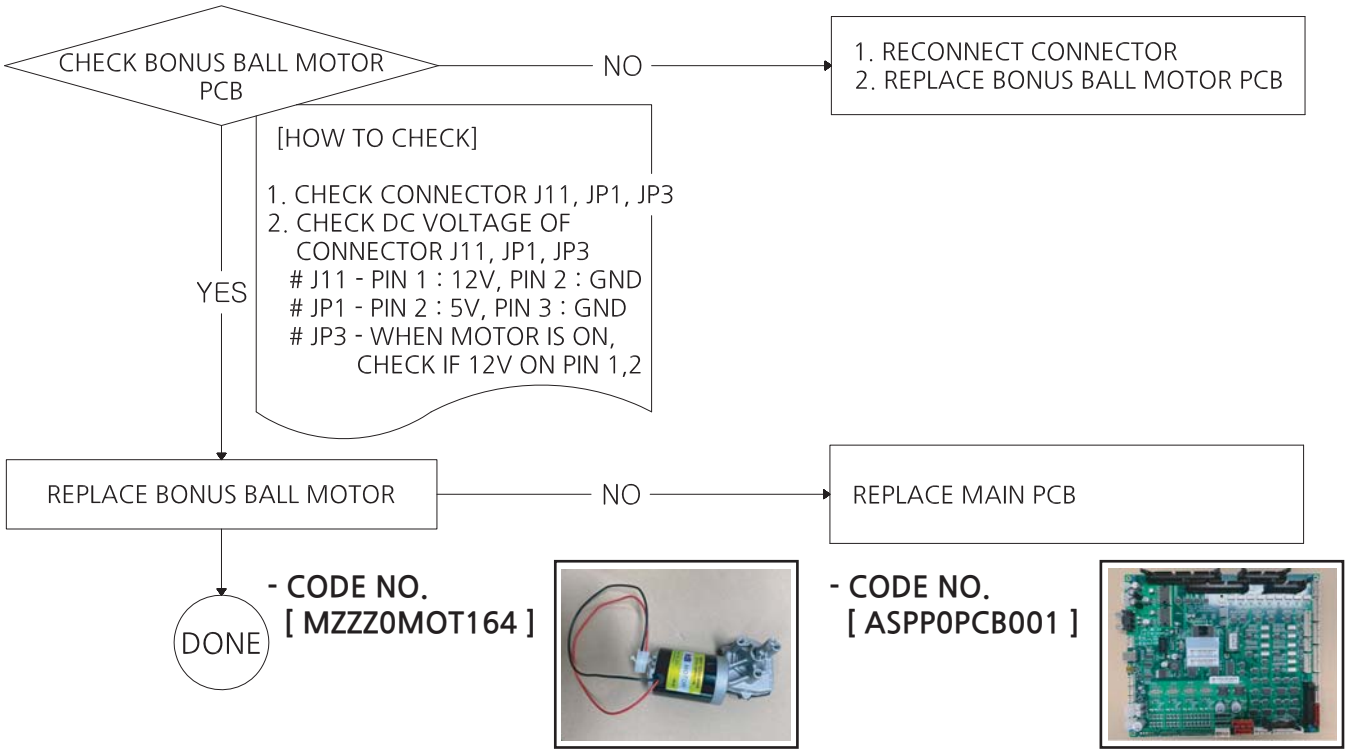
CHECK BONUS BALL MOTOR PCB
NO
1. RECONNECT CONNECTOR
2. REPLACE BONUS BALL MOTOR PCB
[HOW TO CHECK]
1. CHECK CONNECTOR J11, JP1, JP3
2. CHECK DC VOLTAGE OF CONNECTOR J11, JP1, JP3
J11 - PIN 1 : 12V, PIN 2 : GND
JP1 - PIN 2 : 5V, PIN 3 : GND
JP3 - WHEN MOTOR IS ON, CHECK IF 12V ON PIN 1,2
YES
REPLACE BONUS BALL MOTOR
NO
REPLACE MAIN PCB
DONE
- CODE NO.
[MZZZ0MOT164]
- CODE NO.
[ASPP0PCB001]

* General check up : Check the supply voltage and wiring connection properly
* "NO" : Means faulty of the check up result.

4-8. BONUS BALL SENSOR ERROR [E.51] - IN CASE OF DISC ENCODER SENSOR PROBLEM

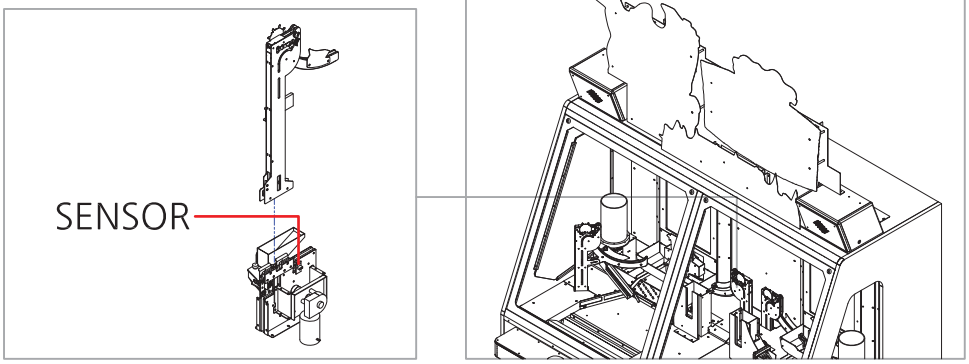

BONUS BALL SENSOR ERROR [E.51]

TEST SENSOR — YES → DONE

NO

[HOW TO TEST]

1. TEST MODE > MOT BNS BALL
2. ON/OFF BY SELECT BUTTON OR 1,2P BALL SHOOTING BUTTON
3. CHECK SUPER BONUS FND DISPLAY
   FND [□■□□] 1P BOTTOM ENCODER SENSOR
   FND [□□□■] 2P BOTTOM ENCODER SENSOR
4. CHECK DC VOLTAGE FROM INPUT TEST

CHECK SENSOR — NO →

1. RECONNECT CONNECTOR
2. REMOVE DEBRIS ON SENSOR
3. ADJUST POSITION OF SENSOR AND BRACKET

YES

[HOW TO CHECK]

1. CHECK SENSOR CONNECTOR
2. CHECK IF THERE IS DEBRIS ON SENSOR OR BRACKET
3. CHECK THE POSITION OF ENCODER SENSOR AND BRACKET
4. CHECK IF THE BALL ARE STUCK

CHECK MAIN PCB — NO →

1. RECONNECT CONNECTOR
2. REPLACE MAIN PCB

YES

[HOW TO CEHCK]

1. CHECK CONNECTOR CN30
2. CHECK DC VOLTAGE OF CONNECTOR CN 30
   1P) CN30_A PIN 1 : 5V,
   PIN 2 : 0.1V, PIN 4 : GND
   2P) CN30_B PIN 1 : 5V,
   PIN 2 : 0.1V, PIN 4 : GND
3. CHECK JOIN CONNECTOR

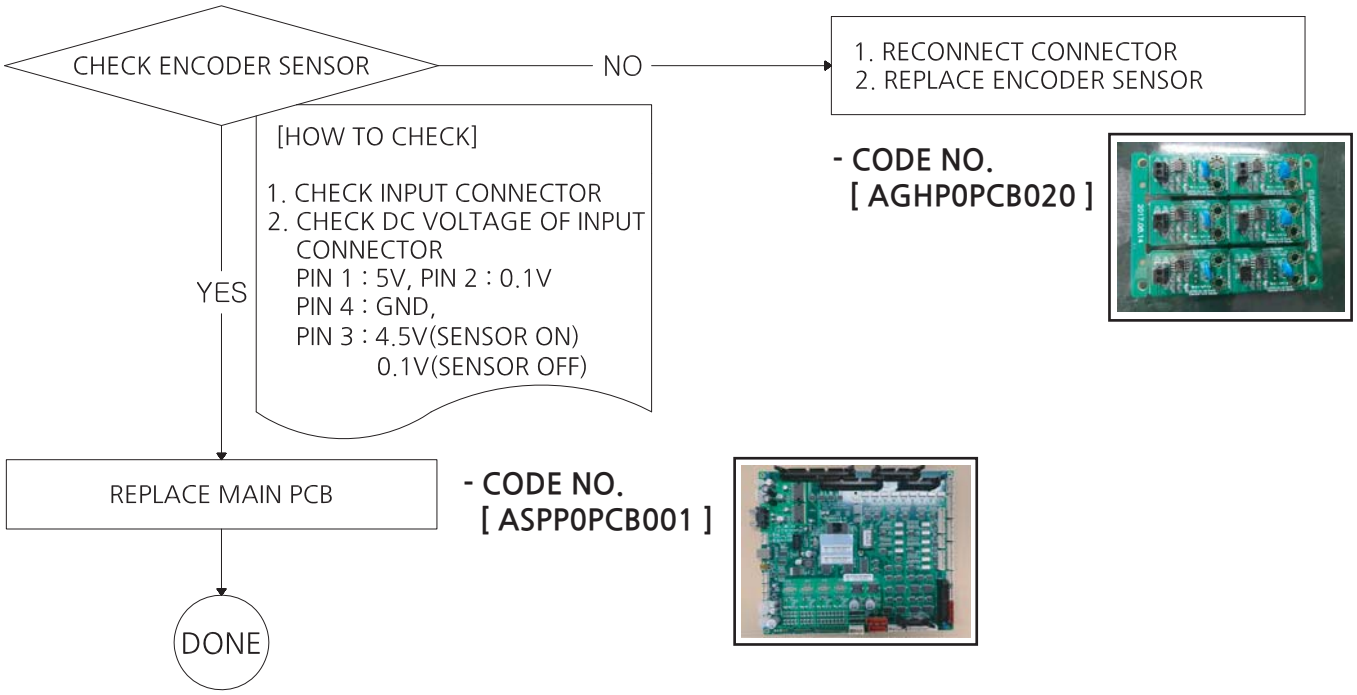
CHECK ENCODER SENSOR
NO
1. RECONNECT CONNECTOR
2. REPLACE ENCODER SENSOR
- CODE NO.
[AGHP0PCB020]
[HOW TO CHECK]
1. CHECK INPUT CONNECTOR
2. CHECK DC VOLTAGE OF INPUT CONNECTOR
PIN 1 : 5V, PIN 2 : 0.1V
PIN 4 : GND,
PIN 3 : 4.5V(SENSOR ON)
0.1V(SENSOR OFF)
YES
REPLACE MAIN PCB
- CODE NO.
[ASPP0PCB001]
DONE

* General check up : Check the supply voltage and wiring connection properly
* "NO" : Means faulty of the check up result.

4-9. BONUS BALL SHOOTING ERROR [E.52]
- IN CASE OF BALL EMPTY CHECK EMITTER, RECEIVER SENSOR PROBLEM

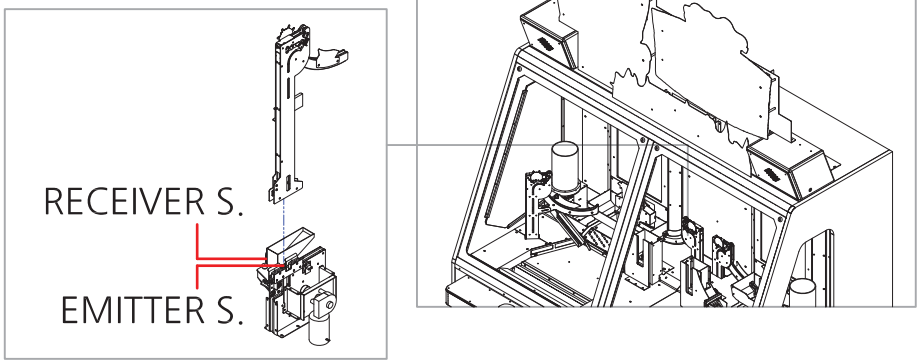

BONUS BALL SHOOTING ERROR [E.52]

TEST SENSOR — YES → DONE

NO

[HOW TO TEST]

1. TEST MODE > MOT BNS BALL
2. ON/OFF BY SELECT BUTTON
3. CHECK LED COLOR ON LEFT/RIGHT OF MONITOR
   1P LEFT LED: RED ON MAIN SHOOTER
   BALL EMPTY SENSOR SIGNAL
   1P RIGHT LED: GREEN ON BONUS BALL
   BALL EMPTY SENSOR SIGNAL
   2P IS OPPOSITE SIDE FROM 1P
4. CHECK DC VOLTAGE FROM INPUT TEST

CHECK SENSOR — NO →
1. RECONNECT CONNECTOR
2. REMOVE DEBRIS ON SENSOR
3. ADJUST POSITION OF SENSOR AND BRACKET
4. RECONNECT F.G WIRE

YES

[HOW TO CHECK]

1. CHECK SENSOR CONNECTOR
2. CHECK IF THERE IS DEBRIS ON SENSOR OR BRACKET
3. CHECK THE POSITION OF ENCODER SENSOR AND BRACKET
4. CHECK IF THE BALL ARE STUCK
5. CHECK IF F.G WIRE IS CONNECTED

CHECK MAIN PCB — NO →
1. RECONNECT CONNECTOR
2. REPLACE MAIN PCB

YES

[HOW TO CEHCK]

1. CHECK CONNECTOR CN30
2. CHECK DC VOLTAGE OF CONNECTOR CN 30
   1P) CN30_A PIN 9 : 5V,
   PIN 11 : 0.1V, PIN 17 : GND
   2P) CN30_B PIN 9: 5V,
   PIN 11 : 0.1V, PIN 17 : GND

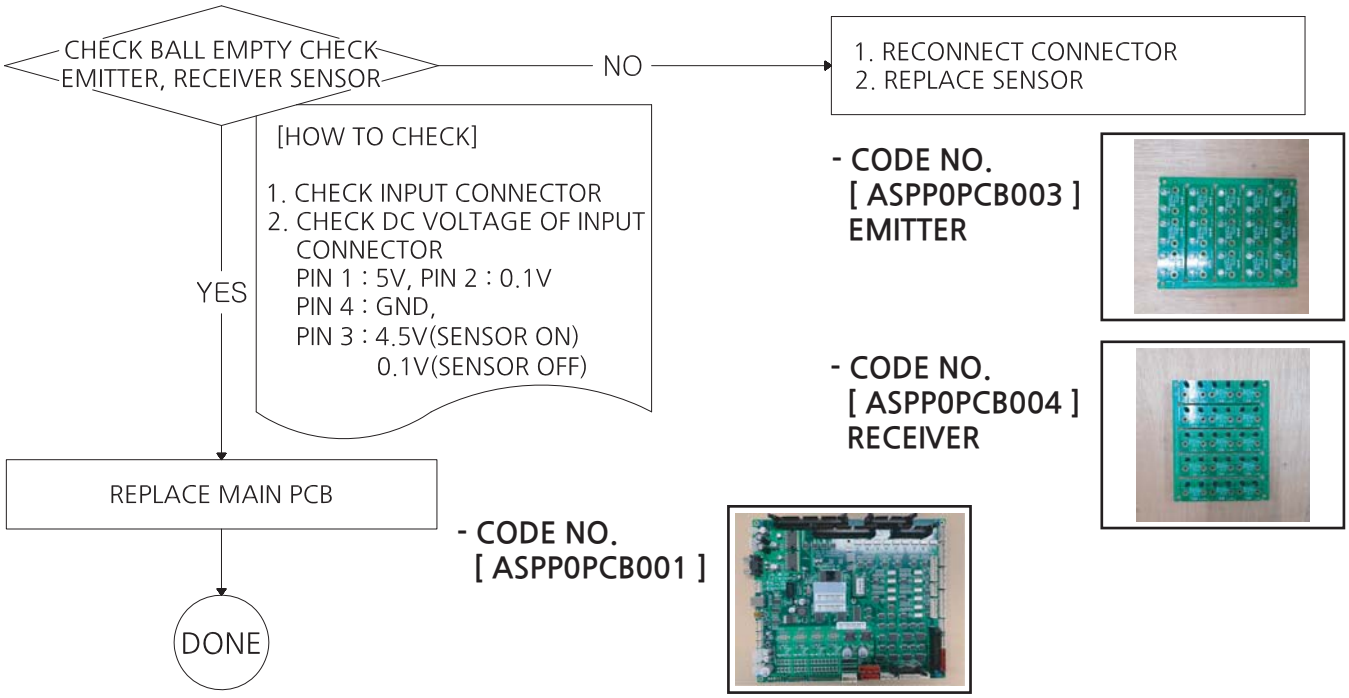
CHECK BALL EMPTY CHECK
EMITTER, RECEIVER SENSOR
NO
1. RECONNECT CONNECTOR
2. REPLACE SENSOR
[HOW TO CHECK]
1. CHECK INPUT CONNECTOR
2. CHECK DC VOLTAGE OF INPUT CONNECTOR
PIN 1 : 5V, PIN 2 : 0.1V
PIN 4 : GND,
PIN 3 : 4.5V(SENSOR ON)
0.1V(SENSOR OFF)
YES
REPLACE MAIN PCB
DONE
- CODE NO.
[ASPP0PCB003]
EMITTER
- CODE NO.
[ASPP0PCB004]
RECEIVER
- CODE NO.
[ASPP0PCB001]

* General check up : Check the supply voltage and wiring connection properly
* "NO" : Means faulty of the check up result.

4-10. BONUS BALL SHOOTING ERROR [E.52]
- IN CASE OF TOP SENSOR(SHOOTER) PROBLEM

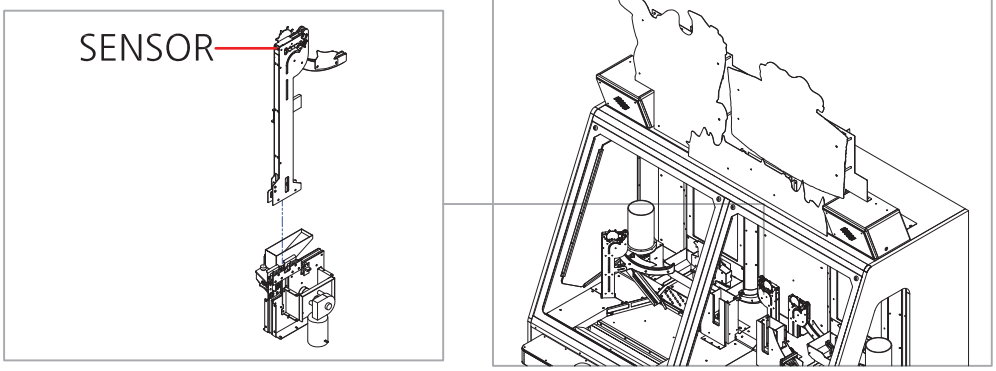

BONUS BALL SHOOTING ERROR [E.51]

TEST SENSOR — YES → DONE

NO

[HOW TO TEST]

1. TEST MODE > MOT BNS BALL
2. ON/OFF BY SELECT BUTTON
   OR 1,2P BALL SHOOTING BUTTON
3. CHECK SUPER BONUS FND DISPLAY
   FND [■□□□] 1P UPPER BALL DISPENSING SENSOR
   FND [□□■□] 2P UPPER BALL DISPENSING SENSOR
4. CHECK DC VOLTAGE FROM INPUT TEST

CHECK TOP SHOOTER SENSOR — NO →

1. RECONNECT CONNECTOR
2. REMOVE DEBRIS ON SENSOR
3. ADJUST POSITION OF SENSOR AND BRACKET

YES

[HOW TO CHECK]

1. CHECK SENSOR CONNECTOR
2. CHECK IF THERE IS DEBRIS ON SENSOR OR BRACKET
3. CHECK THE POSITION OF ENCODER SENSOR AND BRACKET

CHECK MAIN PCB — NO →

1. RECONNECT CONNECTOR
2. REPLACE MAIN PCB

YES

[HOW TO CEHCK]

1. CHECK CONNECTOR CN30
2. CHECK DC VOLTAGE OF CONNECTOR CN 30
   1P) CN30_A PIN 1 : 5V,
   PIN 2 : 0.1V, PIN 4 : GND
   2P) CN30_B PIN 10: 5V,
   PIN 2 : 0.1V, PIN 4 : GND

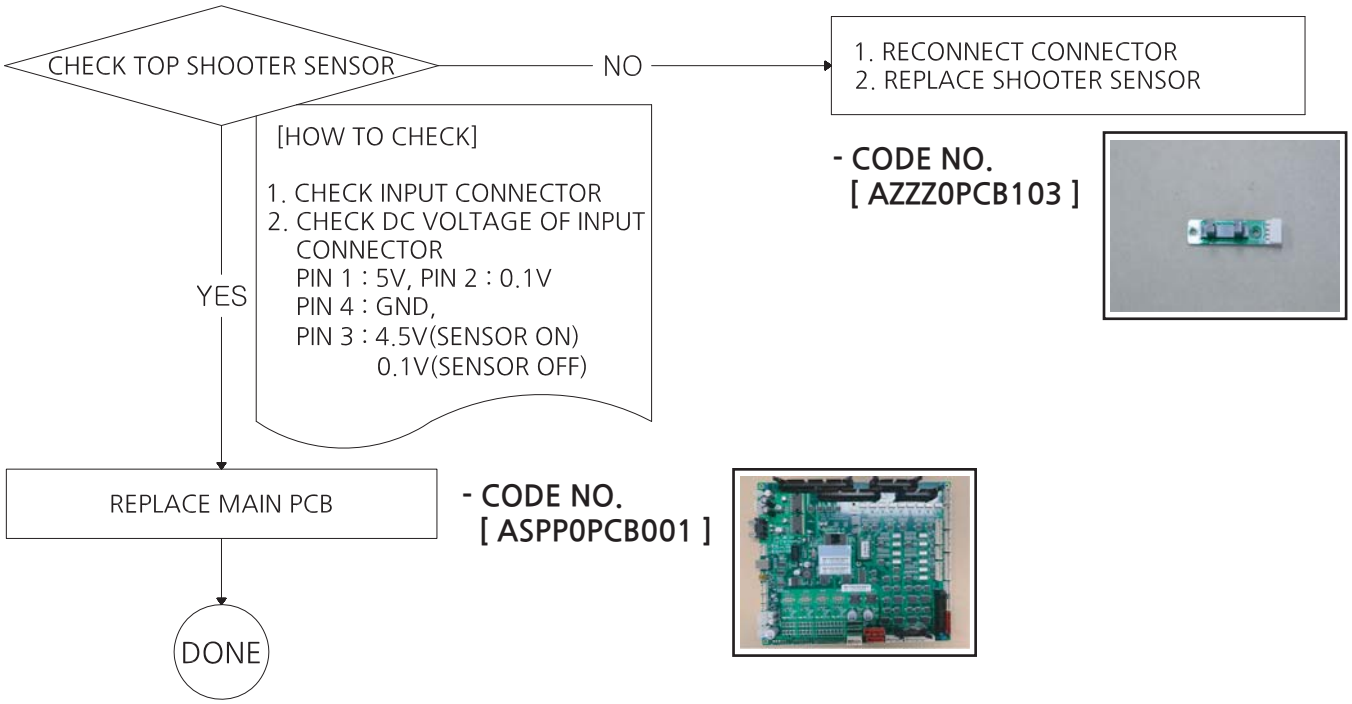
CHECK TOP SHOOTER SENSOR
NO
1. RECONNECT CONNECTOR
2. REPLACE SHOOTER SENSOR
- CODE NO.
[AZZZ0PCB103]
[HOW TO CHECK]
1. CHECK INPUT CONNECTOR
2. CHECK DC VOLTAGE OF INPUT CONNECTOR
PIN 1 : 5V, PIN 2 : 0.1V
PIN 4 : GND,
PIN 3 : 4.5V(SENSOR ON)
0.1V(SENSOR OFF)
YES
REPLACE MAIN PCB
- CODE NO.
[ASPP0PCB001]
DONE

* General check up : Check the supply voltage and wiring connection properly
* "NO" : Means faulty of the check up result.

4-11. MAIN BALL SHOOTER MOTOR ERROR [E.61]
- IN CASE OF MOTOR PROBLEM

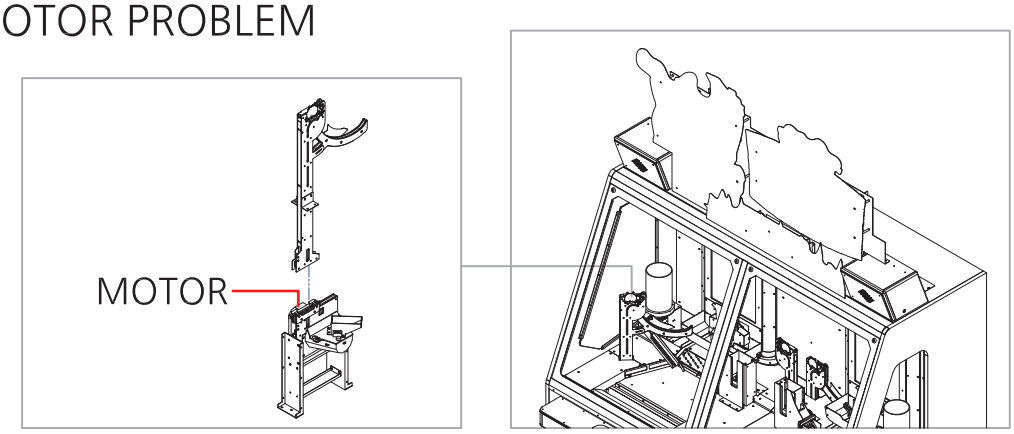

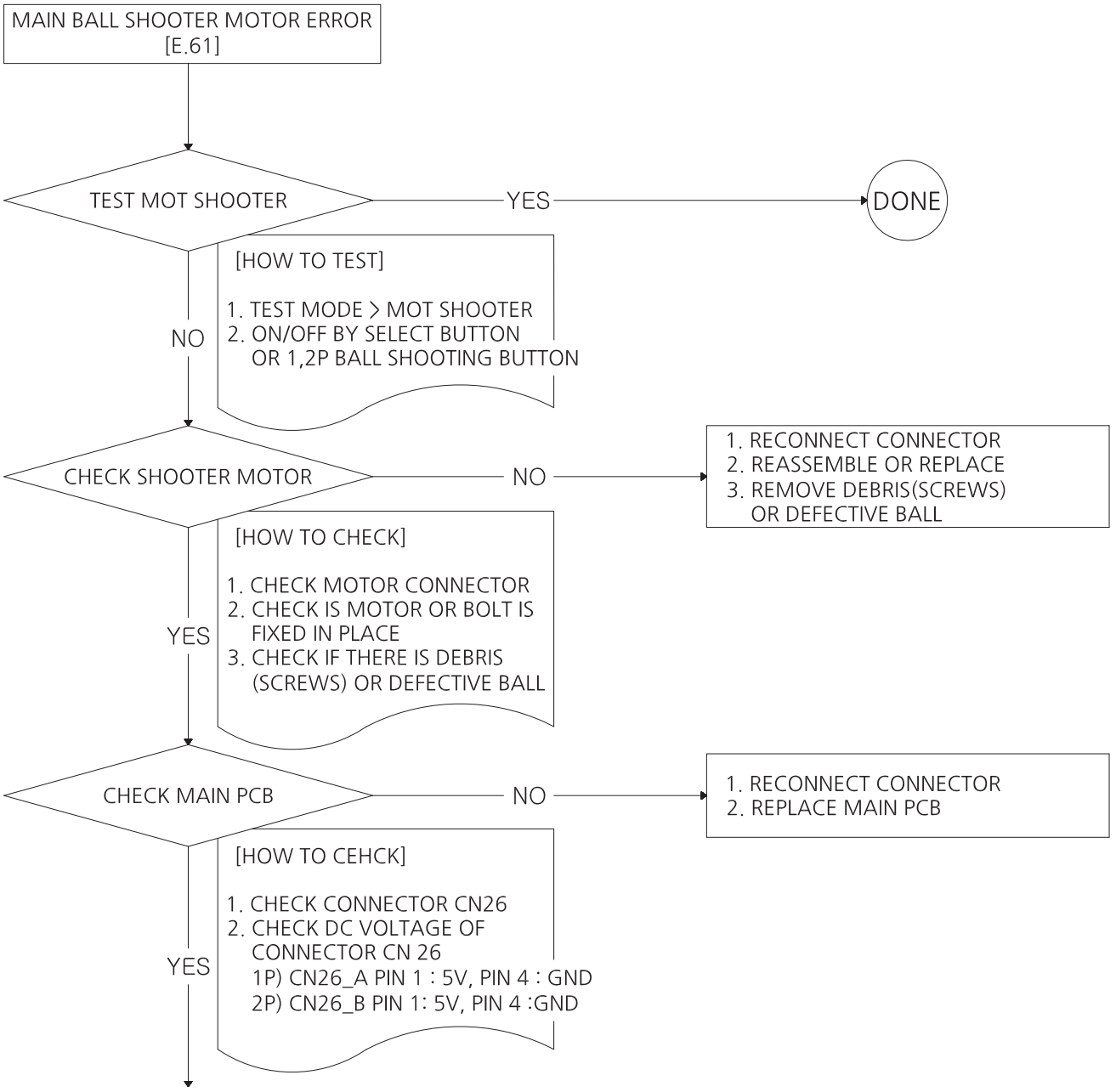

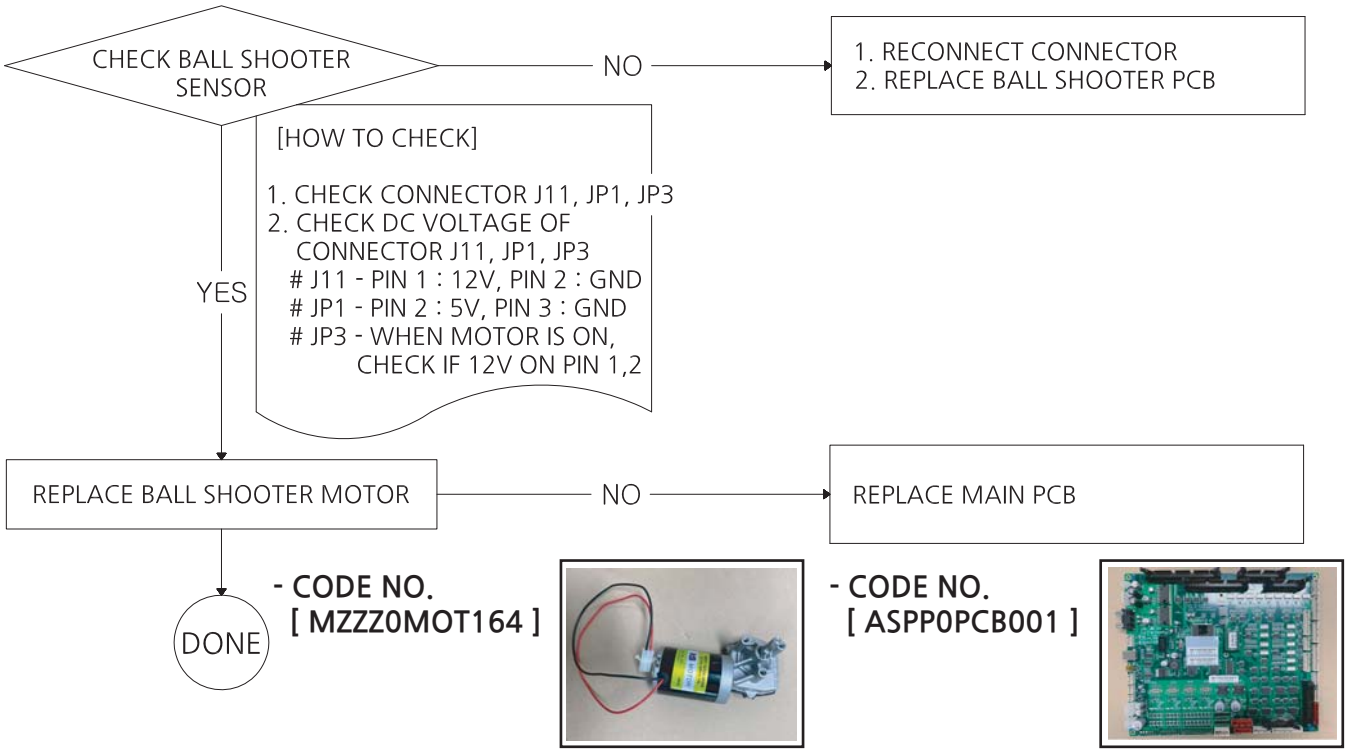
CHECK BALL SHOOTER SENSOR
NO
1. RECONNECT CONNECTOR
2. REPLACE BALL SHOOTER PCB
[HOW TO CHECK]
1. CHECK CONNECTOR J11, JP1, JP3
2. CHECK DC VOLTAGE OF CONNECTOR J11, JP1, JP3
J11 - PIN 1 : 12V, PIN 2 : GND
JP1 - PIN 2 : 5V, PIN 3 : GND
JP3 - WHEN MOTOR IS ON, CHECK IF 12V ON PIN 1,2
YES
REPLACE BALL SHOOTER MOTOR
NO
REPLACE MAIN PCB
DONE
- CODE NO.
[MZZZ0MOT164]
- CODE NO.
[ASPP0PCB001]

* General check up : Check the supply voltage and wiring connection properly
* "NO" : Means faulty of the check up result.

4-12. MAIN BALL SHOOTER SENSOR ERROR [E.61]
- IN CASE OF DISC ENCODER SENSOR PROBLEM

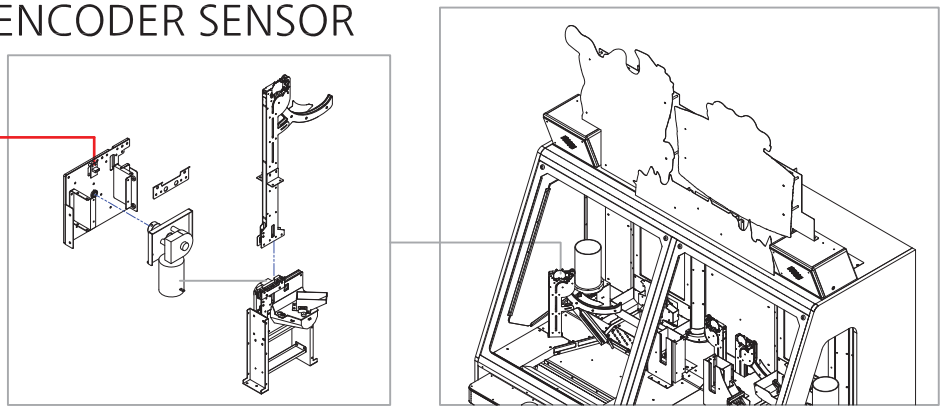

MAIN BALL SHOOTER SENSOR ERROR [E.61]

TEST SENSOR — YES → DONE

NO

[HOW TO TEST]

1. TEST MODE > MOT SHOOTER
2. ON/OFF BY SELECT BUTTON OR 1,2P BALL SHOOTING BUTTON
3. CHECK SUPER BONUS FND DISPLAY
   FND [□■□□] 1P SENSOR STATUS
   FND [□□□■] 2P SENSOR STATUS
4. CHECK DC VOLTAGE FROM INPUT TEST

CHECK SENSOR — NO →

1. RECONNECT CONNECTOR
2. REMOVE DEBRIS ON SENSOR
3. ADJUST POSITION OF SENSOR AND BRACKET

YES

[HOW TO CHECK]

1. CHECK SENSOR CONNECTOR
2. CHECK IF THERE IS DEBRIS ON SENSOR OR BRACKET
3. CHECK THE POSITION OF ENCODER SENSOR AND BRACKET

CHECK MAIN PCB — NO →

1. RECONNECT CONNECTOR
2. REPLACE MAIN PCB

YES

[HOW TO CEHCK]

1. CHECK CONNECTOR CN26
2. CHECK DC VOLTAGE OF CONNECTOR CN 26
   1P) CN26_A PIN 5 : 5V,
   PIN 6 : 0.1V, PIN 9 : GND
   2P) CN26_B PIN 5 : 5V,
   PIN 6 : 0.1V, PIN 9 : GND
3. CHECK JOIN CONNCETOR

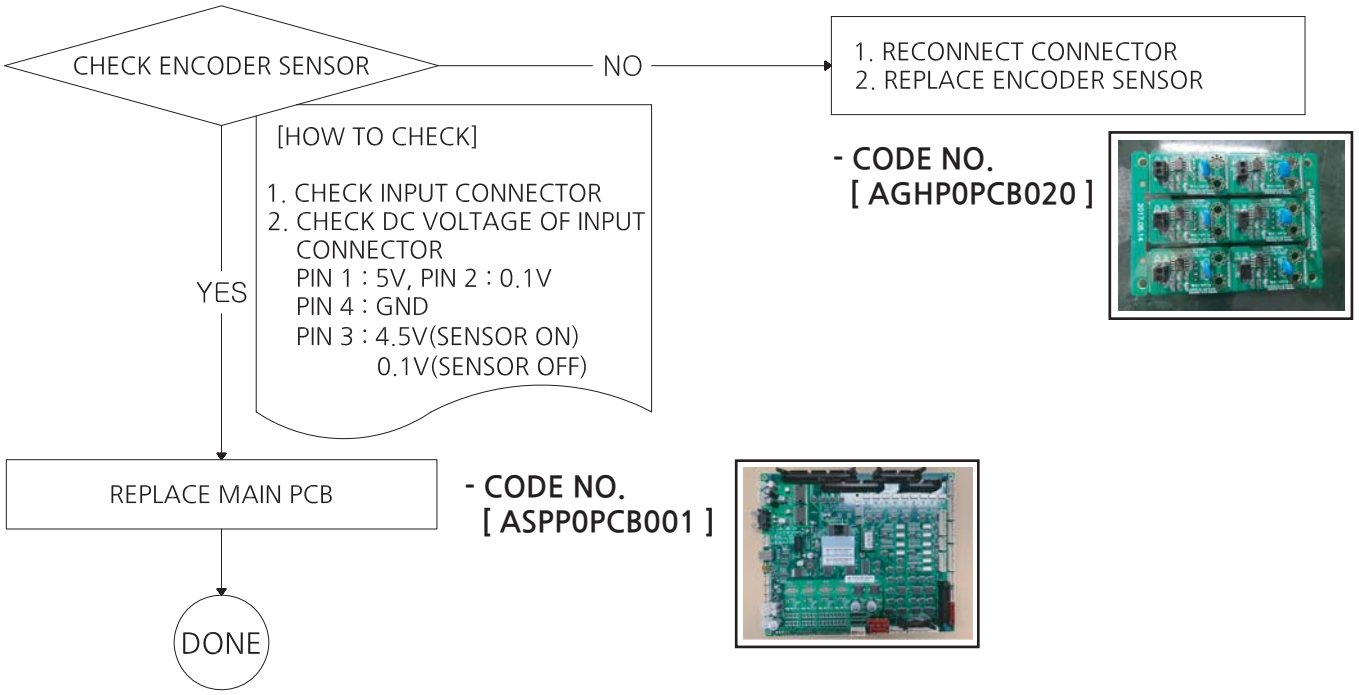
CHECK ENCODER SENSOR
NO
1. RECONNECT CONNECTOR
2. REPLACE ENCODER SENSOR
- CODE NO.
[AGHP0PCB020]
[HOW TO CHECK]
1. CHECK INPUT CONNECTOR
2. CHECK DC VOLTAGE OF INPUT CONNECTOR
PIN 1 : 5V, PIN 2 : 0.1V
PIN 4 : GND
PIN 3 : 4.5V(SENSOR ON)
0.1V(SENSOR OFF)
YES
REPLACE MAIN PCB
- CODE NO.
[ASPP0PCB001]
DONE

* General check up : Check the supply voltage and wiring connection properly
* "NO" : Means faulty of the check up result.

4-13. MAIN BALL SHOOTER ERROR [E.62]
- IN CASE OF BALL EMPTY CHECK
EMITTER, RECEIVER SENSOR PROBLEM

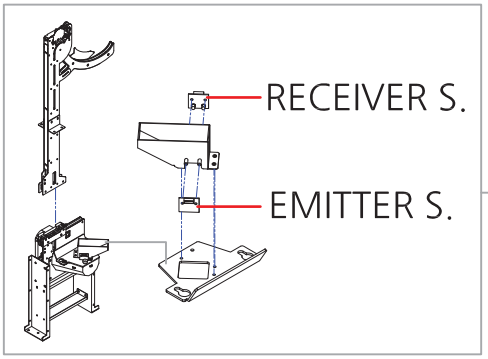

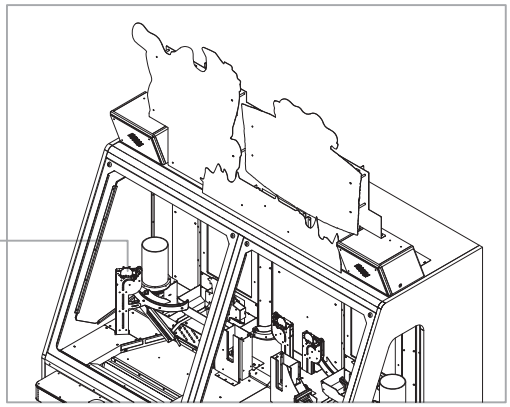

MAIN BALL SHOOTING ERROR [E.62]

TEST SENSOR — YES → DONE

NO

[HOW TO TEST]

1. TEST MODE > MOT SHOOTER
2. ON/OFF BY SELECT BUTTON OR 1,2P BALL SHOOTING BUTTON
3. CHECK LED COLOR ON LEFT/ RIGHT OF MONITOR
   1P LEFT LED : RED ON MAIN SHOOTER BALL EMPTY SENSOR SIGNAL
   1P RIGHT LED : GREEN ON BONUS BALL BALL EMPTY SENSOR SIGNAL
   2P IS OPPOSITE SIDE FROM 1P
4. CHECK DC VOLTAGE FROM INPUT TEST

CHECK SENSOR — NO →

1. RECONNECT CONNECTOR
2. REMOVE DEBRIS ON SENSOR
3. ADJUST POSITION OF SENSOR AND BRACKET
4. RECONNECT F.G WIRE

YES

[HOW TO CHECK]

1. CHECK SENSOR CONNECTOR
2. CHECK IF THERE IS DEBRIS ON SENSOR OR BRACKET
3. CHECK THE POSITION OF ENCODER SENSOR AND BRACKET
4. CHECK IF THE BALLS ARE STUCK
5. CHECK IF F.G WIRE IS CONNECTED

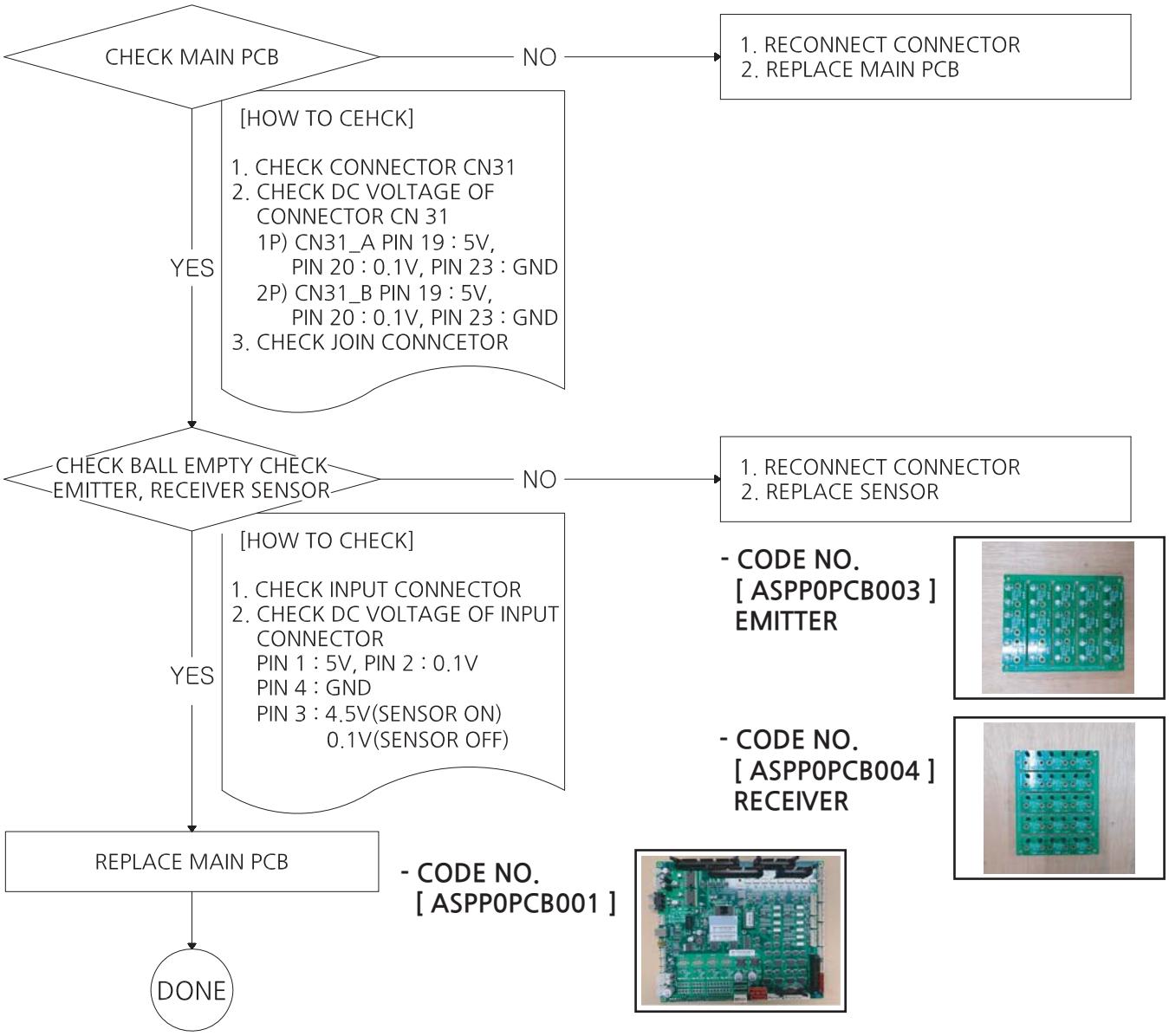
CHECK MAIN PCB
NO
1. RECONNECT CONNECTOR
2. REPLACE MAIN PCB
[HOW TO CEHCK]
1. CHECK CONNECTOR CN31
2. CHECK DC VOLTAGE OF CONNECTOR CN 31
1P) CN31_A PIN 19 : 5V, PIN 20 : 0.1V, PIN 23 : GND
2P) CN31_B PIN 19 : 5V, PIN 20 : 0.1V, PIN 23 : GND
3. CHECK JOIN CONNCETOR
YES
CHECK BALL EMPTY CHECK EMITTER, RECEIVER SENSOR
NO
1. RECONNECT CONNECTOR
2. REPLACE SENSOR
[HOW TO CHECK]
1. CHECK INPUT CONNECTOR
2. CHECK DC VOLTAGE OF INPUT CONNECTOR
PIN 1 : 5V, PIN 2 : 0.1V
PIN 4 : GND
PIN 3 : 4.5V(SENSOR ON)
0.1V(SENSOR OFF)
YES
- CODE NO.
[ASPP0PCB003]
EMITTER
- CODE NO.
[ASPP0PCB004]
RECEIVER
REPLACE MAIN PCB
- CODE NO.
[ASPP0PCB001]
DONE

* General check up : Check the supply voltage and wiring connection properly
* "NO" : Means faulty of the check up result.

4-14. MAIN BALL SHOOTER SENSOR ERROR [E.62]
- IN CASE OF TOP SENSOR(SHOOTER) PROBLEM

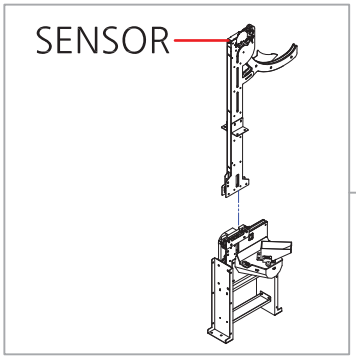

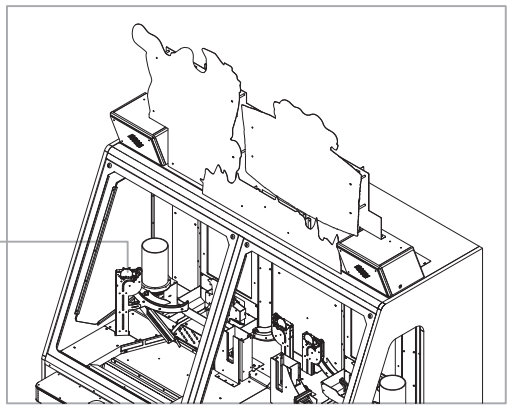

MAIN BALL SHOOTER SENSOR ERROR [E.62]

TEST SHOOTER SENSOR
- YES → DONE
- NO →

[HOW TO TEST]

1. TEST MODE > MOT SHOOTER
2. ON/OFF BY SELECT BUTTON OR 1,2P BALL SHOOTING BUTTON
3. CHECK SUPER BONUS FND DISPLAY
   FND [□■□□] 1P SENSOR STATUS
   FND [□□□■] 2P SENSOR STATUS
4. CHECK DC VOLTAGE FROM INPUT TEST

CHECK TOP SHOOTER SENSOR
- NO → 1. RECONNECT CONNECTOR 2. REMOVE DEBRIS ON SENSOR 3. ADJUST POSITION OF SENSOR AND BRACKET
- YES →

[HOW TO CHECK]

1. CHECK SENSOR CONNECTOR
2. CHECK IF THERE IS DEBRIS ON SENSOR OR BRACKET
3. CHECK THE POSITION OF ENCODER SENSOR AND BRACKET

CHECK MAIN PCB
- NO → 1. RECONNECT CONNECTOR 2. REPLACE MAIN PCB
- YES →

[HOW TO CEHCK]

1. CHECK CONNECTOR CN26
2. CHECK DC VOLTAGE OF CONNECTOR CN 26
   1P) CN26_A PIN 5 : 5V, PIN 6 : 0.1V, PIN 9 : GND
   2P) CN26_B PIN 5 : 5V, PIN 6 : 0.1V, PIN 9 : GND
3. CHECK JOIN CONNCETOR

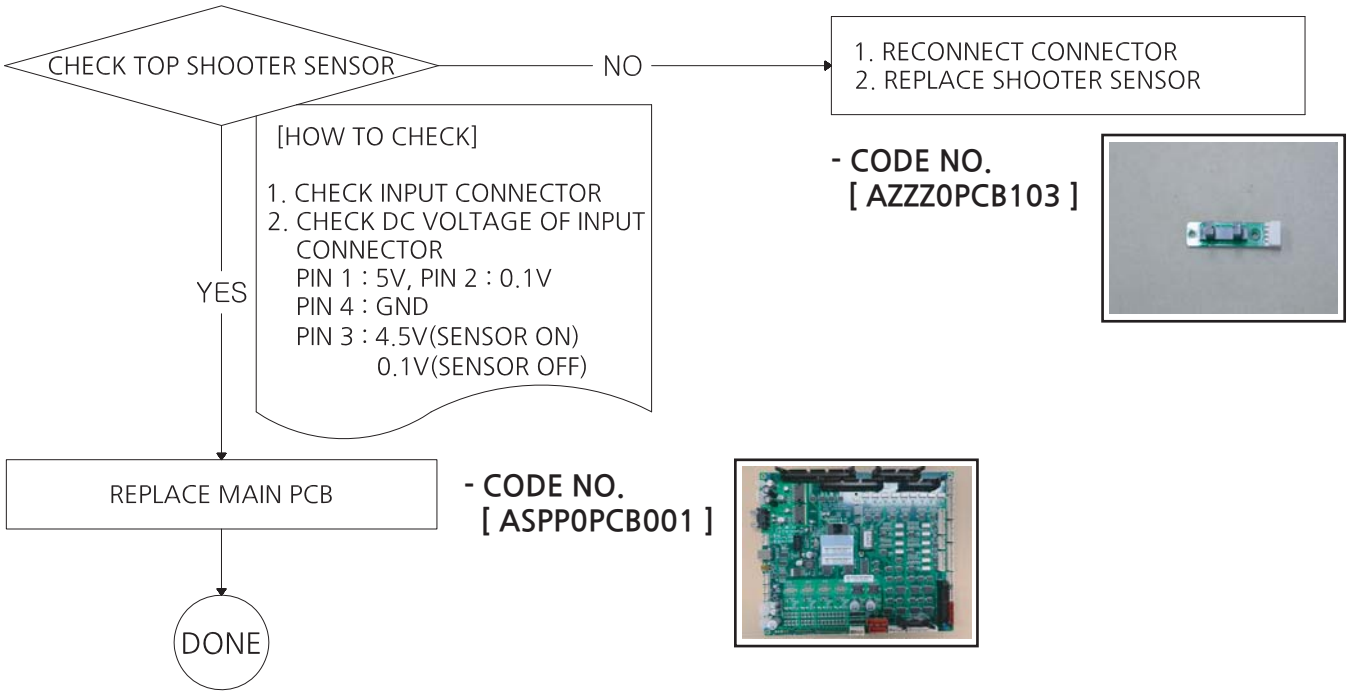
CHECK TOP SHOOTER SENSOR
NO
1. RECONNECT CONNECTOR
2. REPLACE SHOOTER SENSOR
- CODE NO.
[AZZZ0PCB103]
[HOW TO CHECK]
1. CHECK INPUT CONNECTOR
2. CHECK DC VOLTAGE OF INPUT CONNECTOR
PIN 1 : 5V, PIN 2 : 0.1V
PIN 4 : GND
PIN 3 : 4.5V(SENSOR ON)
0.1V(SENSOR OFF)
YES
REPLACE MAIN PCB
- CODE NO.
[ASPP0PCB001]
DONE

* General check up : Check the supply voltage and wiring connection properly
* "NO" : Means faulty of the check up result.

4-15. INTERNAL BALL CIRCULATION EV MOTOR ERROR [E.71] - IN CASE OF MOTOR PROBLEM

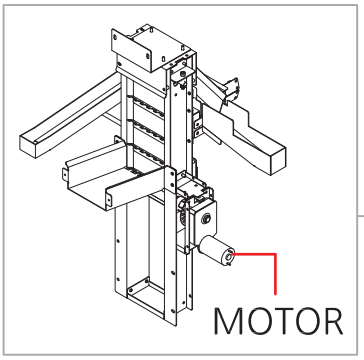

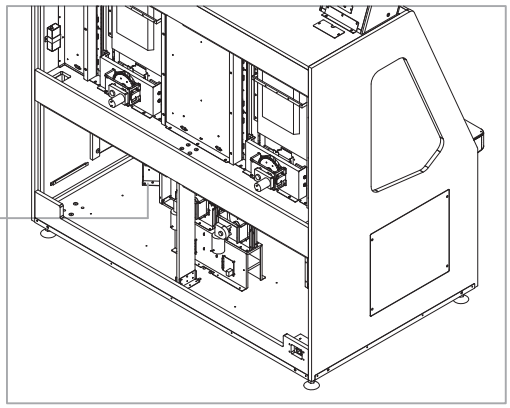

INTERNAL BALL CIRCULATION EV MOTOR ERROR [E.71]

TEST MOT CIRC ELEV MOTOR — YES → DONE

NO

[HOW TO TEST]

1. TEST MODE > MOT CIRC ELEV
2. ON/OFF BY SELECT BUTTON OR 1,2P BALL SHOOTING BUTTON
3. USE ANALOG TESTER ONLY WHEN YOU CHECK DC VOLTAGE AT MOT CIRC ELEV

CHECK MOT CIRC ELEV MOTOR — NO →

1. RECONNECT CONNECTOR
2. REASSEMBLE OR REPLACE
3. REMOVE DEBRIS(SCREWS) OR DEFECTIVE BALL

YES

[HOW TO CHECK]

1. CHECK MOTOR CONNECTOR
2. CHECK IF MOTOR OR BOLT IS FIXED IN PLACE
3. CHECK IF THERE IS DEBRIS (SCREWS) OR DEFECTIVE BALL
4. IF BALLS ARE STUCK TOO MUCH

CHECK MAIN PCB — NO →

1. RECONNECT CONNECTOR
2. REPLACE MAIN PCB

YES

[HOW TO CEHCK]

1. CHECK CONNECTOR CN31
2. CHECK DC VOLTAGE OF CONNECTOR CN31
   1P) CN31_A PIN 1 : 5V, PIN 4 : GND,
   PIN 2,3 : 3.3V(MOTOR ON)
   0.1V(MOTOR OFF)
   2P) CN31_B PIN 1 : 5V, PIN 4 : GND,
   PIN 2,3 : 3.3V(MOTOR ON)
   0.1V(MOTOR OFF)
3. CHECK JOIN CONNCETOR

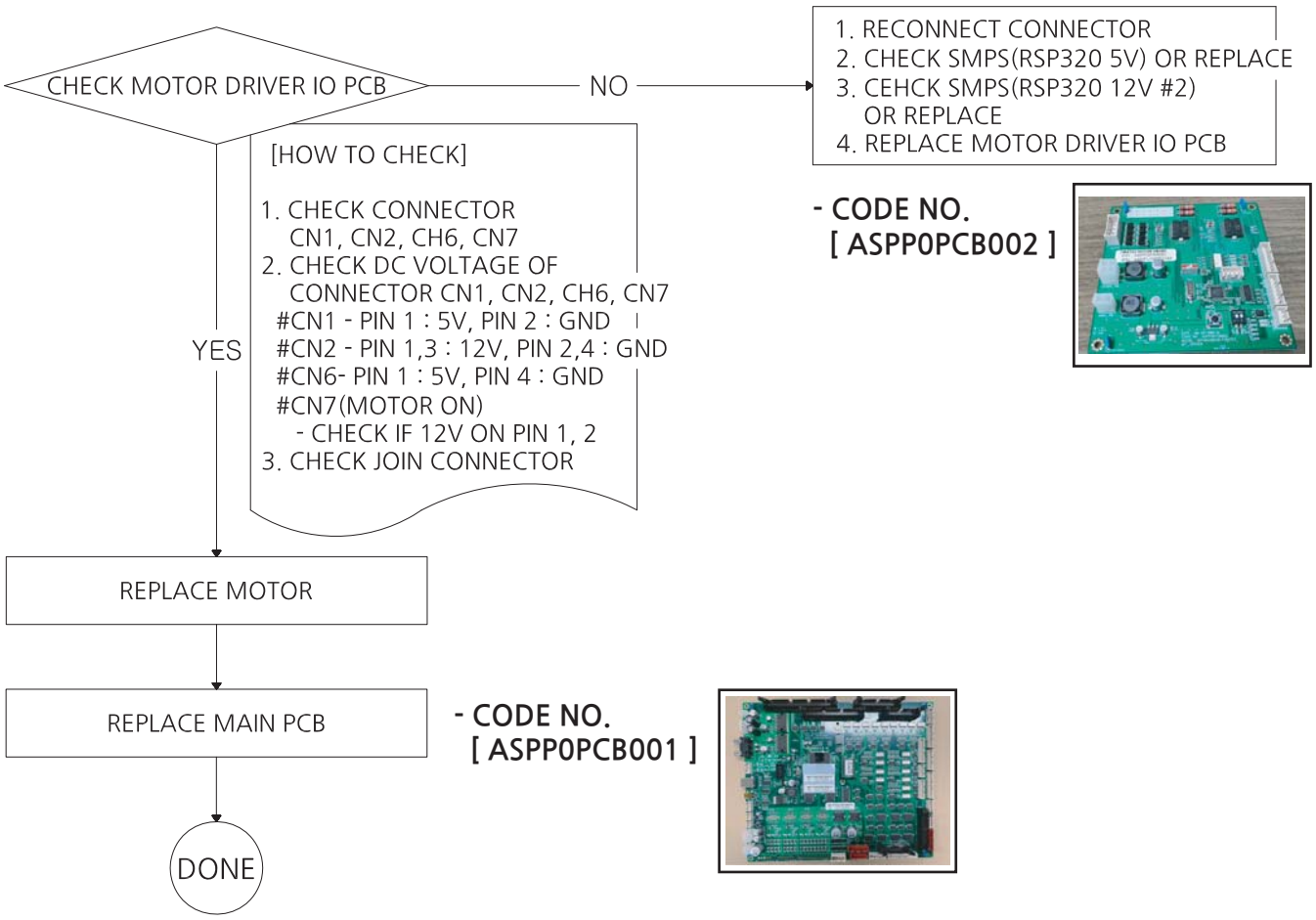
CHECK MOTOR DRIVER IO PCB
NO
1. RECONNECT CONNECTOR
2. CHECK SMPS(RSP320 5V) OR REPLACE
3. CEHCK SMPS(RSP320 12V #2)
OR REPLACE
4. REPLACE MOTOR DRIVER IO PCB
- CODE NO.
[ASPP0PCB002]
YES
[HOW TO CHECK]
1. CHECK CONNECTOR
CN1, CN2, CH6, CN7
2. CHECK DC VOLTAGE OF
CONNECTOR CN1, CN2, CH6, CN7
#CN1 - PIN 1 : 5V, PIN 2 : GND
#CN2 - PIN 1,3 : 12V, PIN 2,4 : GND
#CN6- PIN 1 : 5V, PIN 4 : GND
#CN7(MOTOR ON)
- CHECK IF 12V ON PIN 1, 2
3. CHECK JOIN CONNECTOR
REPLACE MOTOR
REPLACE MAIN PCB
- CODE NO.
[ASPP0PCB001]
DONE

* General check up : Check the supply voltage and wiring connection properly
* "NO" : Means faulty of the check up result.

4-16. INTERNAL BALL CIRCULATION EV SENSOR ERROR [E.71] - IN CASE OF ENCODER SENSOR PROBLEM

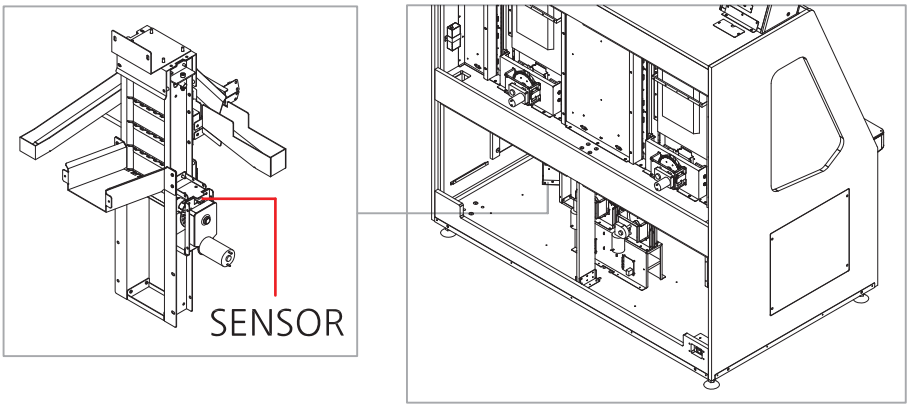

INTERNAL BALL CIRCULATION EV SENSOR ERROR [E.71]

TEST MOT CIRC ELEV SENSOR

YES → DONE

NO

[HOW TO TEST]

1. TEST MODE > MOT CIRC ELEV
2. ON/OFF BY SELECT BUTTON OR 1,2P BALL SHOOTING BUTTON
3. CHECK SUPER BONUS FND DISPLAY
   FND [□■□□] 1P SENSOR STATUS
   FND [□□□■] 2P SENSOR STATUS
4. CHECK DC VOLTAGE FROM INPUT TEST

CHECK MOT CIRC ELEV SENSOR

NO →
1. RECONNECT CONNECTOR
2. REMOVE DEBRIS ON SENSOR
3. ADJUST POSITION OF SENSOR AND BRACKET

YES

[HOW TO CHECK]

1. CHECK SENSOR CONNECTOR
2. CHECK IF THERE IS DEBRIS ON SENSOR OR BRACKET
3. CHECK THE POSITION OF ENCODER SENSOR AND BRACKET

CHECK MAIN PCB

NO →
1. RECONNECT CONNECTOR
2. REPLACE MAIN PCB

YES

[HOW TO CEHCK]

1. CHECK CONNECTOR CN31
2. CHECK DC VOLTAGE OF CONNECTOR CN31
   1P) CN31_A PIN 5 : 5V, PIN 6 : 0.1V, PIN 9 : GND
   2P) CN31_B PIN 5 : 5V, PIN 6 : 0.1V, PIN 9 : GND
3. CHECK JOIN CONNECTOR

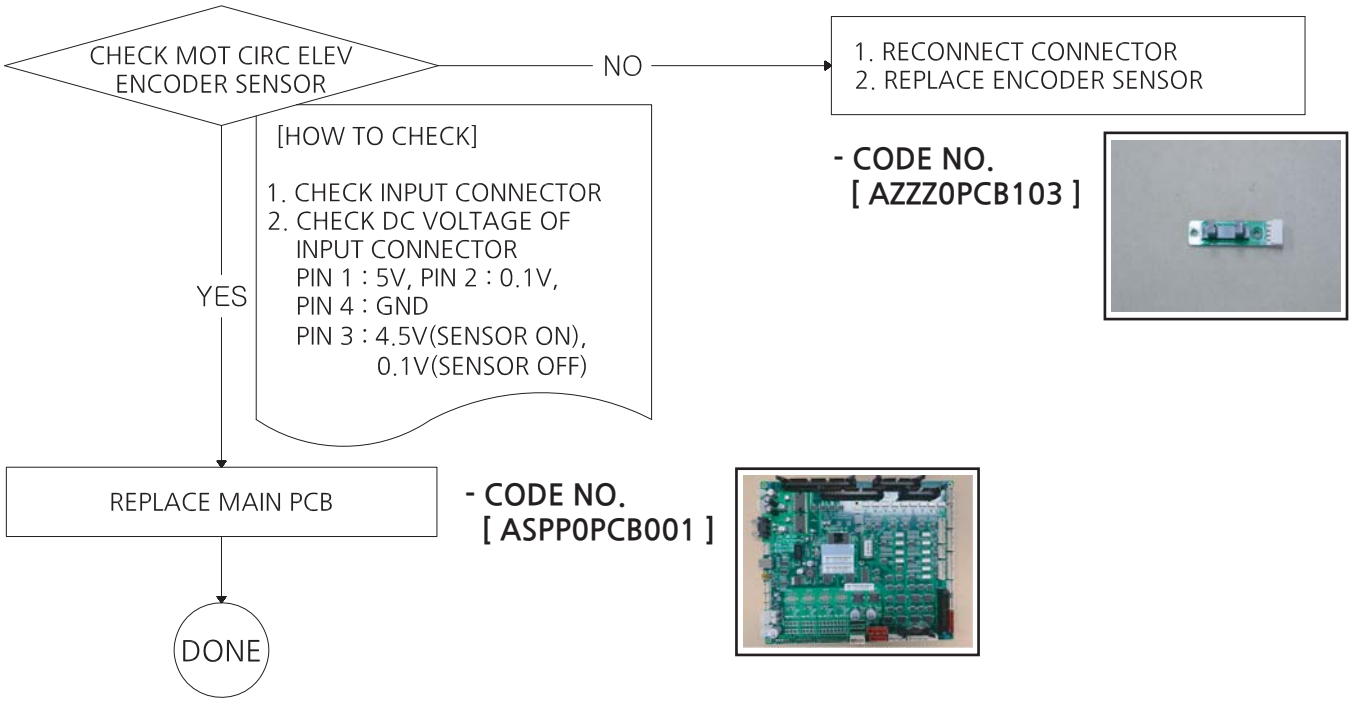
CHECK MOT CIRC ELEV ENCODER SENSOR
NO
1. RECONNECT CONNECTOR
2. REPLACE ENCODER SENSOR
- CODE NO.
[AZZZ0PCB103]
[HOW TO CHECK]
1. CHECK INPUT CONNECTOR
2. CHECK DC VOLTAGE OF INPUT CONNECTOR
PIN 1 : 5V, PIN 2 : 0.1V,
PIN 4 : GND
PIN 3 : 4.5V(SENSOR ON),
0.1V(SENSOR OFF)
YES
REPLACE MAIN PCB
- CODE NO.
[ASPP0PCB001]
DONE

* General check up : Check the supply voltage and wiring connection properly
* "NO" : Means faulty of the check up result.

4-17. INTERNAL BALL CIRCULATION BRIDGE MOTOR ERROR [E.72] - IN CASE OF MOTOR PROBLEM

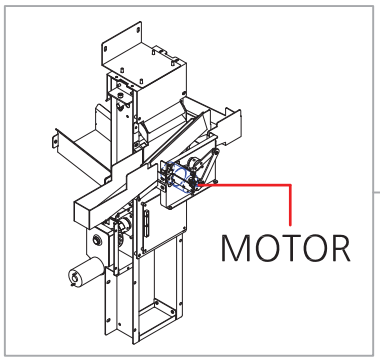

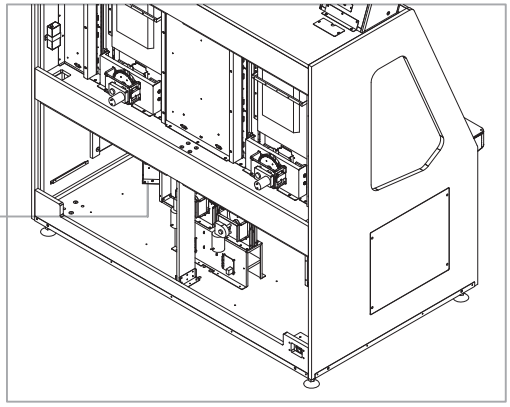

INTERNAL BALL CIRCULATION BRIDGE MOTOR ERROR [E.72]

TEST MOT CIRC BRID MOTOR — YES → DONE

NO

[HOW TO TEST]

1. TEST MODE > MOT CIRC BRID
2. ON/OFF BY SELECT BUTTON OR 1,2P BALL SHOOTING BUTTON
3. USE ANALOG TESTER ONLY WHEN YOU CHECK DC VOLTAGE AT MOT CIRC BRID

CHECK MOT CIRC BRID MOTOR — NO →

1. RECONNECT CONNECTOR
2. REASSEMBLE OR REPLACE
3. ADJUST SENSOR AND BRACKET

YES

[HOW TO CHECK]

1. CHECK MOTOR CONNECTOR
2. CHECK IF MOTOR OR BOLT IS FIXED IN PLACE
3. CHECK SENSOR AND BRACKET POSITION

CHECK MAIN PCB — NO →

1. RECONNECT CONNECTOR
2. REPLACE MAIN PCB

YES

[HOW TO CEHCK]

1. CHECK CONNECTOR CN31
2. CHECK DC VOLTAGE OF CONNECTOR CN31
   1P)CN31_A PIN 10 : 5V,
   PIN 13 : GND
   PIN 11, 12 : 3.3V(MOTOR OFF)
   0.1V(MOTOR ON)
   2P)CN31_B PIN 10 : 5V,
   PIN 13 : GND
   PIN 11, 12 : 3.3V(MOTOR OFF)
   0.1V(MOTOR ON)
3. CHECK JOIN CONNECTOR

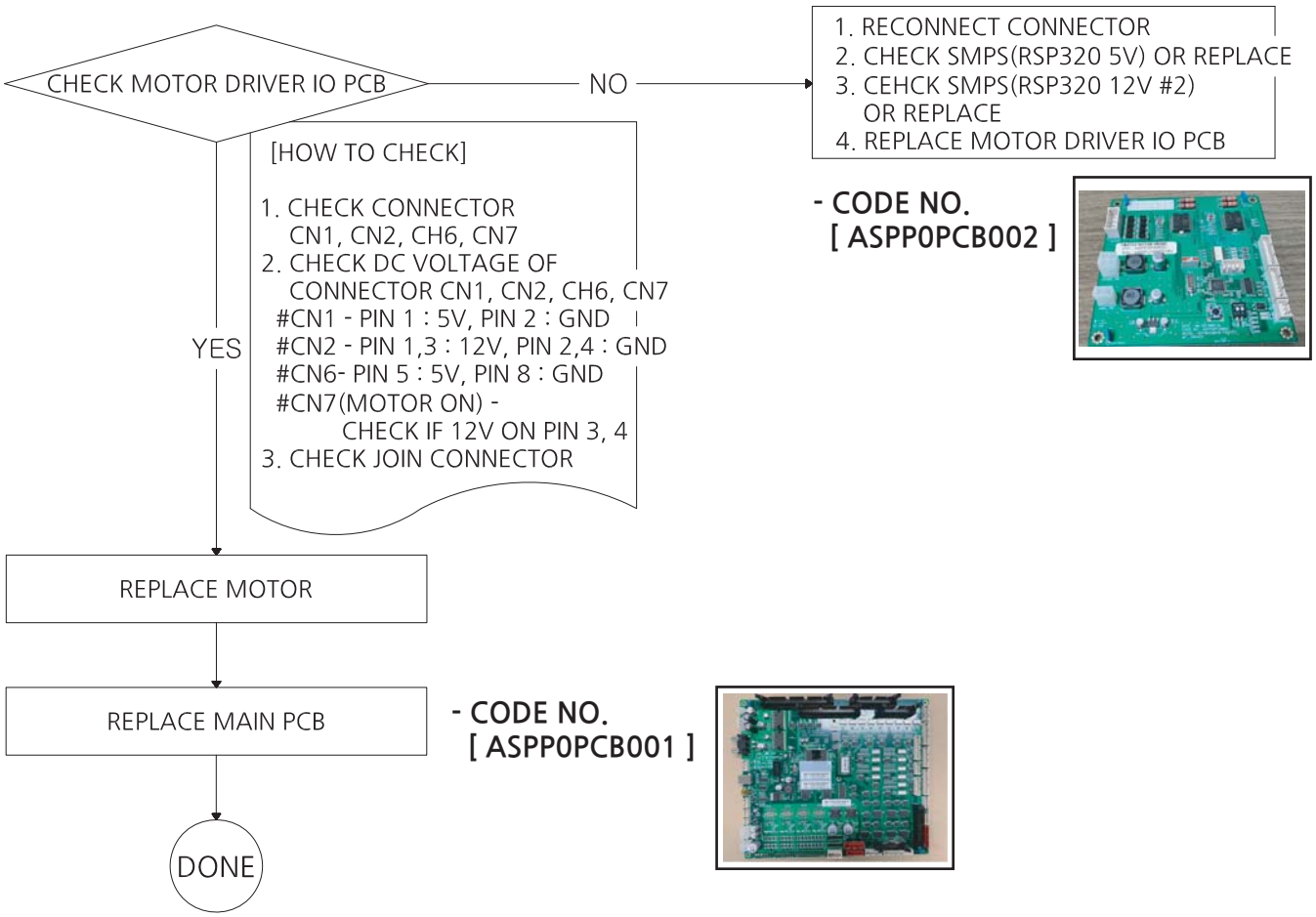
CHECK MOTOR DRIVER IO PCB
NO
1. RECONNECT CONNECTOR
2. CHECK SMPS(RSP320 5V) OR REPLACE
3. CEHCK SMPS(RSP320 12V #2)
OR REPLACE
4. REPLACE MOTOR DRIVER IO PCB
- CODE NO.
[ASPP0PCB002]
[HOW TO CHECK]
1. CHECK CONNECTOR
CN1, CN2, CH6, CN7
2. CHECK DC VOLTAGE OF
CONNECTOR CN1, CN2, CH6, CN7
#CN1 - PIN 1 : 5V, PIN 2 : GND
#CN2 - PIN 1,3 : 12V, PIN 2,4 : GND
#CN6- PIN 5 : 5V, PIN 8 : GND
#CN7(MOTOR ON) -
CHECK IF 12V ON PIN 3, 4
3. CHECK JOIN CONNECTOR
YES
REPLACE MOTOR
REPLACE MAIN PCB
- CODE NO.
[ASPP0PCB001]
DONE

* General check up : Check the supply voltage and wiring connection properly
* "NO" : Means faulty of the check up result.

4-18. INTERNAL BALL CIRCULATION BRIDGE SENSOR ERROR [E.72] - IN CASE OF SENSOR PROBLEM

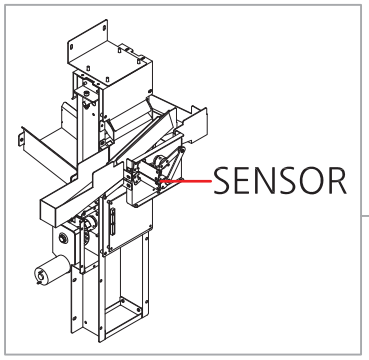

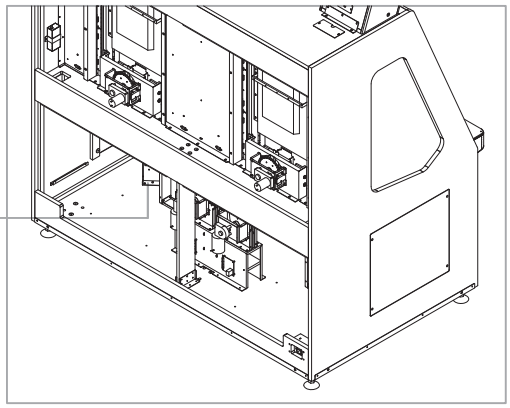

INTERNAL BALL CIRCULATION BRIDGE SENSOR ERROR [E.72]

TEST MOT CIRC BRID SENSOR — YES → DONE

NO

[HOW TO TEST]

1. TEST MODE > MOT CIRC BRID
2. ON/OFF BY SELECT BUTTON OR 1,2P BALL SHOOTING BUTTON
3. CHECK SUPER BONUS FND DISPLAY
   FND [□■□□] 1P SENSOR STATUS
   FND [□□□■] 2P SENSOR STATUS
4. CHECK DC VOLTAGE FROM INPUT TEST

CHECK MOT CIRC BRID ENCODER SENSOR — NO →

1. RECONNECT CONNECTOR
2. REMOVE DEBRIS ON SENSOR
3. ADJUST POSITION OF SENSOR AND BRACKET

YES

[HOW TO CHECK]

1. CHECK SENSOR CONNECTOR
2. CHECK IF THERE IS DEBRIS ON SENSOR OR BRACKET
3. CHECK THE POSITION OF ENCODER SENSOR AND BRACKET

CHECK MAIN PCB — NO →

1. RECONNECT CONNECTOR
2. REPLACE MAIN PCB

YES

[HOW TO CEHCK]

1. CHECK CONNECTOR CN31
2. CHECK DC VOLTAGE OF CONNECTOR CN31
   1P) CN31_A PIN 14 : 5V,
   PIN 15 : 0.1V,PIN 18 : GND
   2P) CN31_B PIN 14 : 5V,
   PIN 15 : 0.1V, PIN 18 : GND
3. CHECK JOIN CONNECTOR

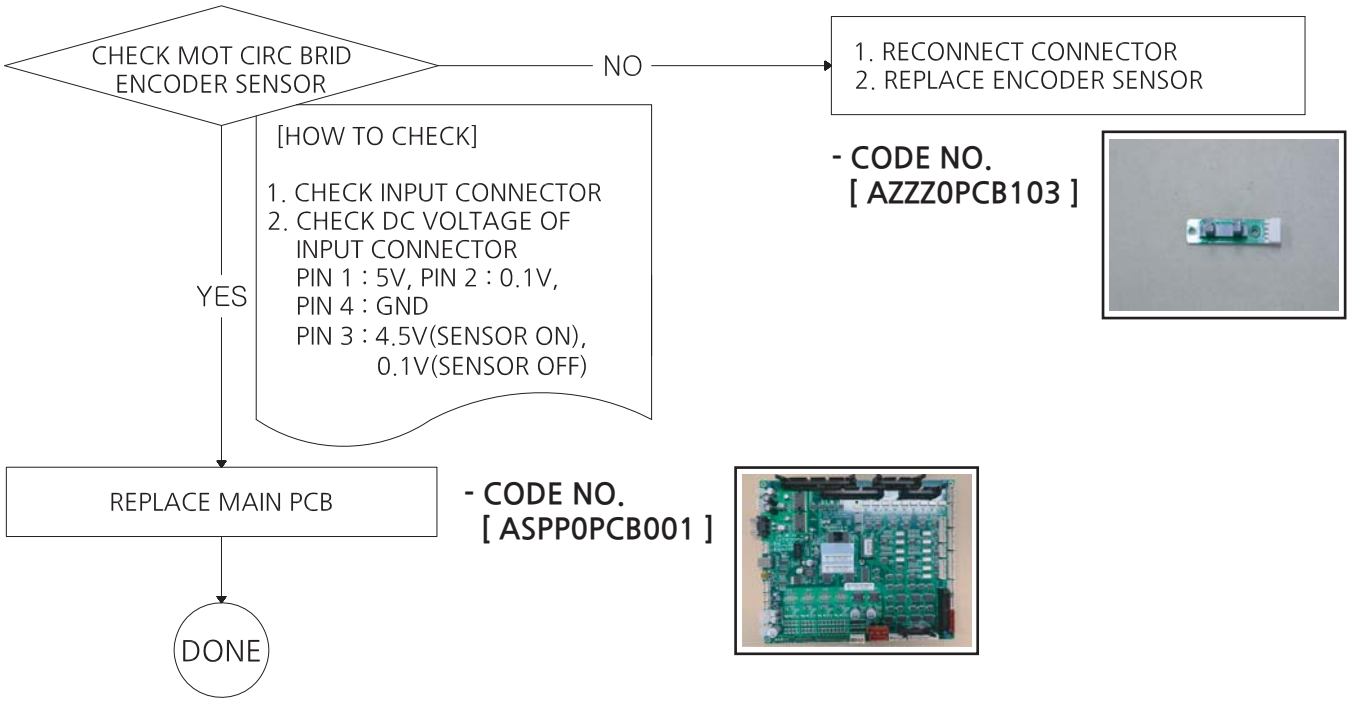
CHECK MOT CIRC BRID
ENCODER SENSOR
NO
1. RECONNECT CONNECTOR
2. REPLACE ENCODER SENSOR
- CODE NO.
[AZZZ0PCB103]
[HOW TO CHECK]
1. CHECK INPUT CONNECTOR
2. CHECK DC VOLTAGE OF
INPUT CONNECTOR
PIN 1 : 5V, PIN 2 : 0.1V,
PIN 4 : GND
PIN 3 : 4.5V(SENSOR ON),
0.1V(SENSOR OFF)
YES
REPLACE MAIN PCB
- CODE NO.
[ASPP0PCB001]
DONE

* General check up : Check the supply voltage and wiring connection properly
* "NO" : Means faulty of the check up result.

4-19. CARD DISPENSER MOTOR ERROR [E.81]
- IN CASE OF MOTOR PROBLEM

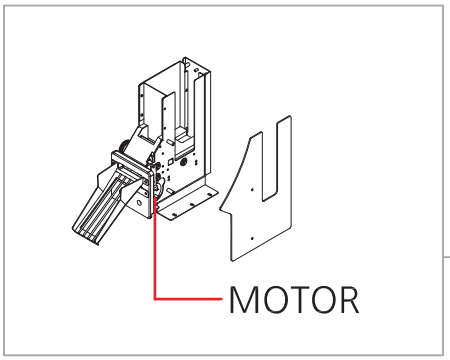

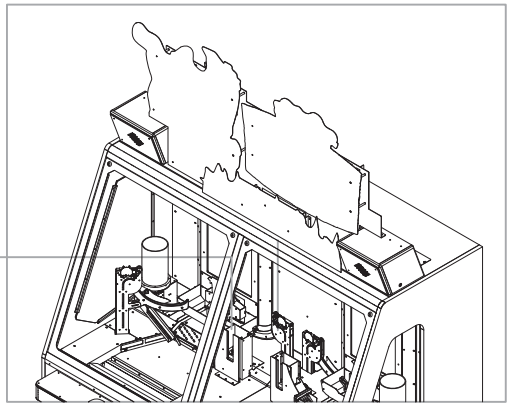

CARD DISPENSER MOTOR ERROR [E.81]

TEST CARD DISPENSER
- YES → DONE
- NO →

[HOW TO TEST]

1. TEST MODE > CARD DISPENS
2. ON/OFF BY SELECT BUTTON OR 1,2P BALL SHOOTING BUTTON

CHECK CARD DISPENSER MOTOR
- NO → 1. RECONNECT CONNECTOR 2. REASSEMBLE OR REPLACE
- YES →

[HOW TO CHECK]

1. CHECK MOTOR CONNECTOR
2. CHECK IF MOTOR OR BOLT IS FIXED IN PLACE
3. CHECK IF ROLLER SPINS WITH NOTRACTION

CHECK MAIN PCB
- NO → 1. RECONNECT CONNECTOR 2. REPLACE MAIN PCB
- YES →

[HOW TO CEHCK]

1. CHECK CONNECTOR CN19
2. CHECK DC VOLTAGE OF CONNECTOR CN19
   1P) PIN 1: 12V, PIN 4: GND
   2P) PIN 5: 12V, PIN 8: GND
3. CHECK JOIN CONNECTOR

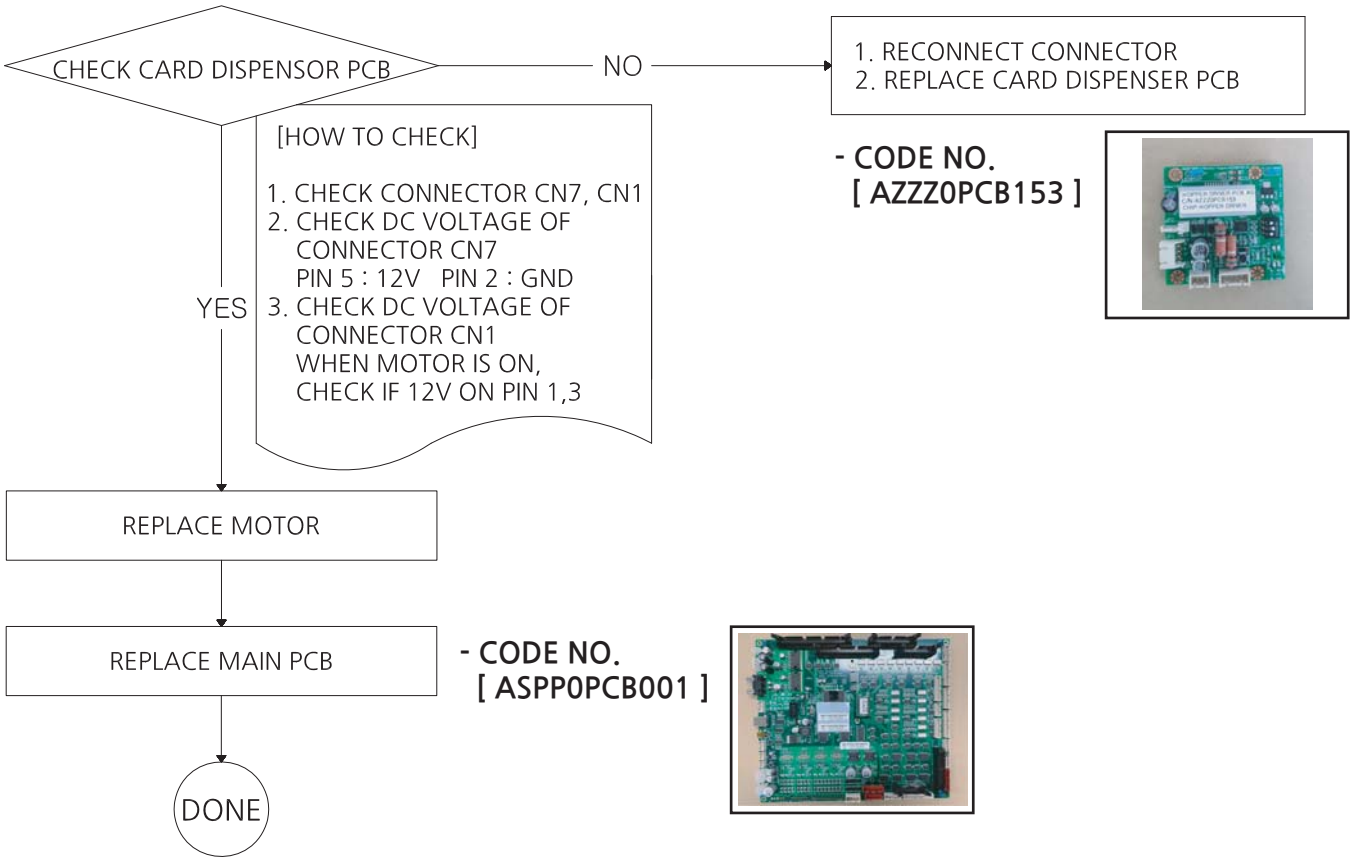
CHECK CARD DISPENSOR PCB
NO
1. RECONNECT CONNECTOR
2. REPLACE CARD DISPENSER PCB
- CODE NO.
[AZZZ0PCB153]
[HOW TO CHECK]
1. CHECK CONNECTOR CN7, CN1
2. CHECK DC VOLTAGE OF
CONNECTOR CN7
PIN 5 : 12V PIN 2 : GND
3. CHECK DC VOLTAGE OF
CONNECTOR CN1
WHEN MOTOR IS ON,
CHECK IF 12V ON PIN 1,3
YES
REPLACE MOTOR
REPLACE MAIN PCB
- CODE NO.
[ASPP0PCB001]
DONE

* General check up : Check the supply voltage and wiring connection properly
* "NO" : Means faulty of the check up result.

4-20. CARD DISPENSER SENSOR ERROR [E.81]
- IN CASE OF SENSOR PROBLEM

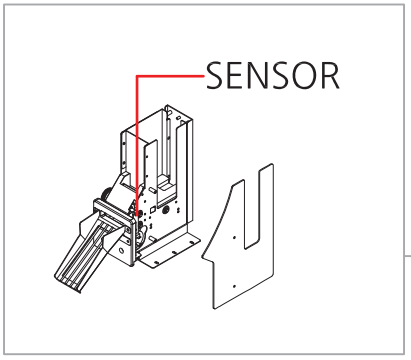

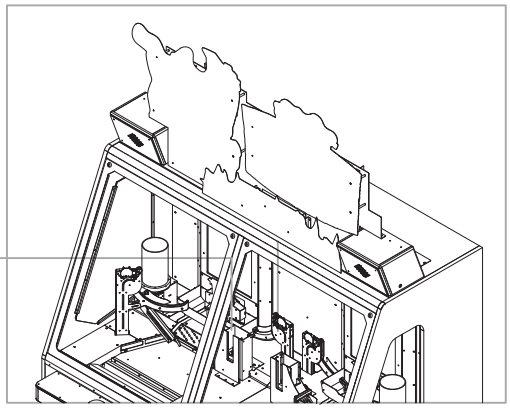

CARD DISPENSER SENSOR ERROR [E.81]

TEST CARD DISPENSER — YES → DONE

NO

[HOW TO TEST]

1. TEST MODE > MOT CHECKER
2. ON/OFF BY SELECT BUTTON OR 1,2P BALL SHOOTING BUTTON
3. CHECK SUPER BONUS FND DISPLAY
   FND [■□□□] 1P MOTOR STATUS
   FND [□■□□] 1P NUMBER OF DISPENSED
   FND [□□■□] 2P MOTOR STATUS
   FND [□□□■] 2P NUMBER OF DISPENSED
4. CHECK DC VOLTAGE FROM INPUT TEST

CHECK CARD DISPENSER MOTOR — NO → 1. RECONNECT CONNECTOR 2. REASSEMBLE OR REPLACE

YES

[HOW TO CHECK]

1. CHECK MOTOR CONNECTOR
2. CHECK IF MOTOR OR BOLT IS FIXED IN PLACE
3. CHECK IF ROLLER SPINS WITH NOTRACTION

CHECK MAIN PCB — NO → 1. RECONNECT CONNECTOR 2. REPLACE MAIN PCB

YES

[HOW TO CEHCK]

1. CHECK CONNECTOR CN19
2. CHECK DC VOLTAGE OF CONNECTOR CN19
   1P) PIN 1: 12V, PIN 4: GND
   2P) PIN 5: 12V, PIN 8: GND
3. CHECK JOIN CONNECTOR

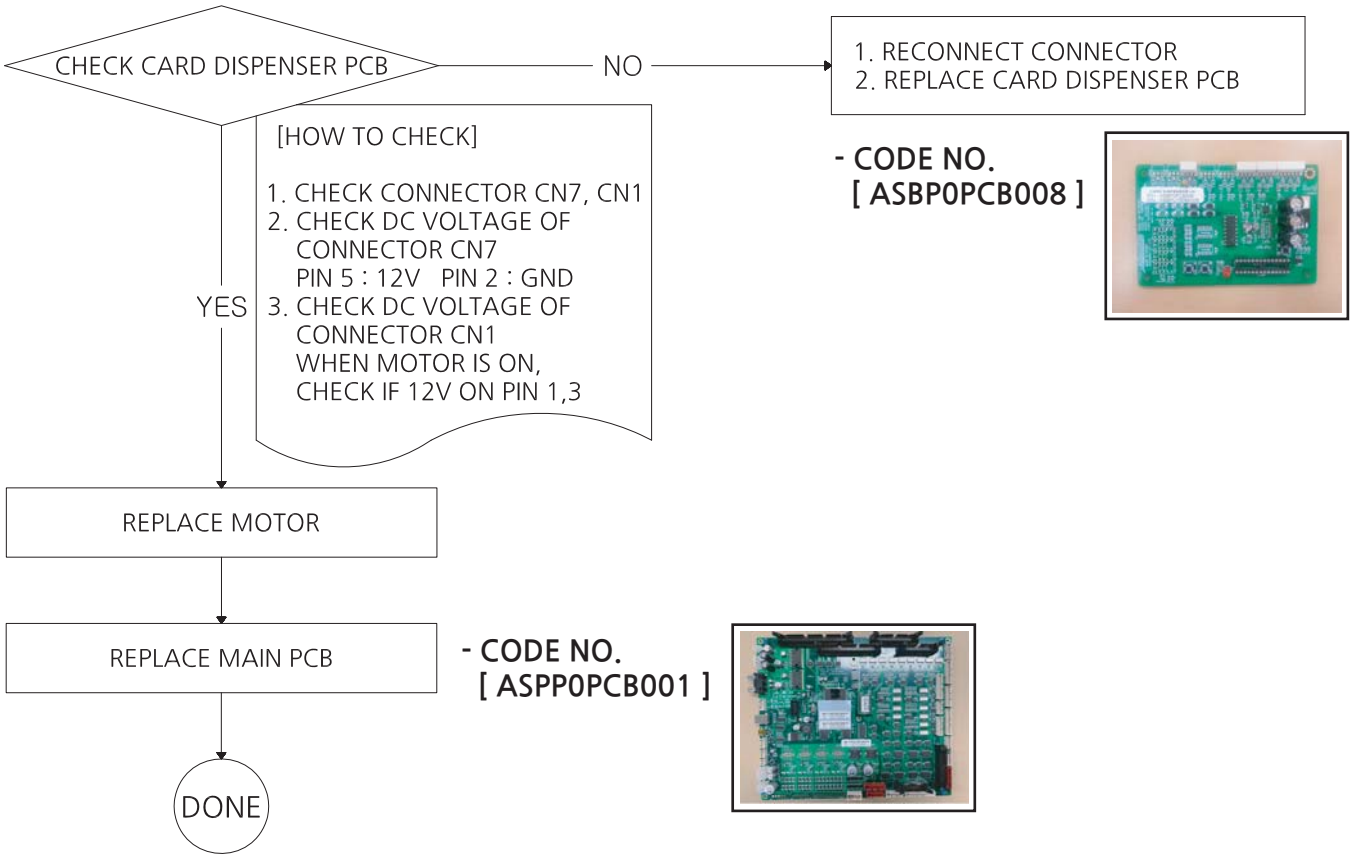
CHECK CARD DISPENSER PCB
NO
1. RECONNECT CONNECTOR
2. REPLACE CARD DISPENSER PCB
- CODE NO.
[ASBP0PCB008]
[HOW TO CHECK]
1. CHECK CONNECTOR CN7, CN1
2. CHECK DC VOLTAGE OF
CONNECTOR CN7
PIN 5 : 12V PIN 2 : GND
YES
3. CHECK DC VOLTAGE OF
CONNECTOR CN1
WHEN MOTOR IS ON,
CHECK IF 12V ON PIN 1,3
REPLACE MOTOR
REPLACE MAIN PCB
- CODE NO.
[ASPP0PCB001]
DONE

* General check up : Check the supply voltage and wiring connection properly
* "NO" : Means faulty of the check up result.

4-21. CHIP HOPPER ERROR [E.81]
- IN CASE OF MOTOR PROBLEM

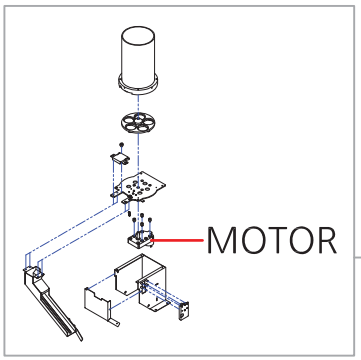

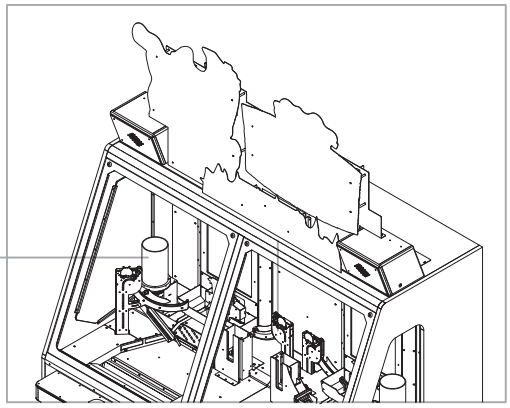

CHIP HOPPER ERROR [E.81]

TEST CHIP HOPPER — YES → DONE

NO

[HOW TO TEST]

1. TEST MODE > CHIP HOPPER
2. ON/OFF BY SELECT BUTTON
   OR 1,2P BALL SHOOTING BUTTON
3. CHECK SUPER BONUS FND DISPLAY
   FND [■□□□] 1P HOPPER STATUS
   FND [□■□□] 1P NUMBER OF DISPENSED
   FND [□□■□] 2P HOPPER STATUS
   FND [□□□■] 2P NUMBER OF DISPENSED

CHECK CHIP HOPPER — NO →
1. REMOVE DEBRIS OR DEFECTIVE CHIP
2. RECONNECT CONNECTOR
3. REPLACE DEFECTIVE PARTS

YES

[HOW TO CHECK]

1. CHECK IF THERE IS CHIP
   STUCK OR DEFECTIVE CHIP
2. CHECK HOPPER SENSOR
   CONNECTOR
3. CHECK IF THERE IS DEBRIS ON
   HOPPER SENSOR
4. CHECK IF THERE IS STUCK POINT
   WHEN YOU SPIN THE DISK BY HAND

CHECK MAIN PCB — NO →
1. RECONNECT CONNECTOR
2. REPLACE MAIN PCB

YES

[HOW TO CEHCK]

1. CHECK CONNECTOR CN13
2. CHECK DC VOLTAGE OF
   CONNECTOR CN13
   1P) PIN 1 : 12V, PIN 2 : 5V
   PIN 5 : GND
   2 P) PIN 6 : 5V, PIN 7 : GND
   PIN 10 : GND

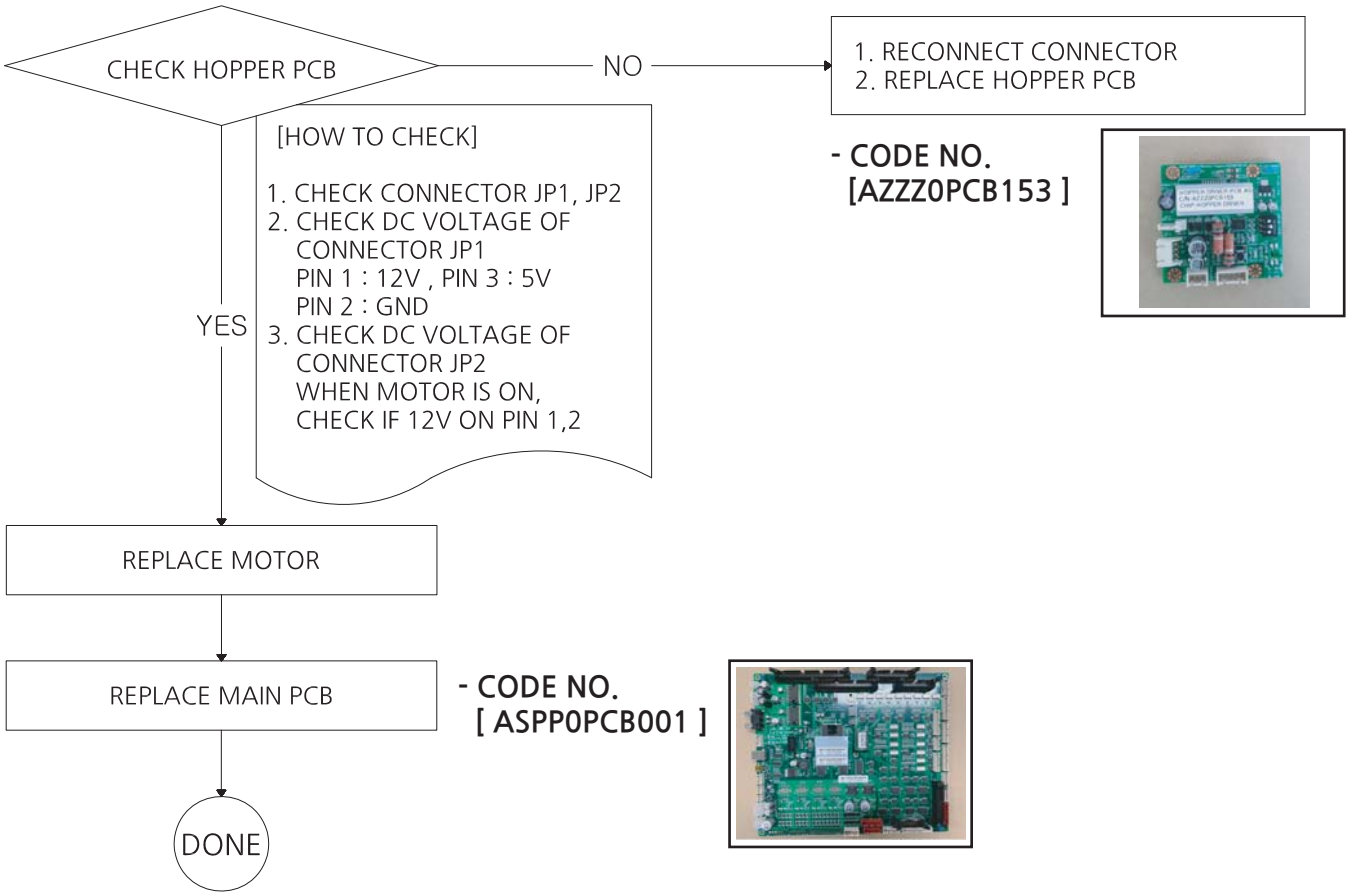
CHECK HOPPER PCB
NO
1. RECONNECT CONNECTOR
2. REPLACE HOPPER PCB
- CODE NO.
[AZZZ0PCB153]
[HOW TO CHECK]
1. CHECK CONNECTOR JP1, JP2
2. CHECK DC VOLTAGE OF
CONNECTOR JP1
PIN 1 : 12V , PIN 3 : 5V
PIN 2 : GND
3. CHECK DC VOLTAGE OF
CONNECTOR JP2
WHEN MOTOR IS ON,
CHECK IF 12V ON PIN 1,2
YES
REPLACE MOTOR
REPLACE MAIN PCB
- CODE NO.
[ASPP0PCB001]
DONE

* General check up : Check the supply voltage and wiring connection properly
* "NO" : Means faulty of the check up result.

4-22. CHIP HOPPER ERROR [E.81]
- IN CASE OF SENSOR PROBLEM

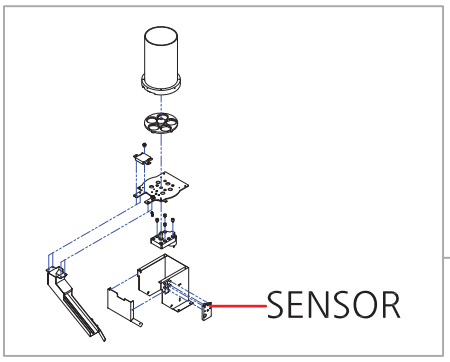

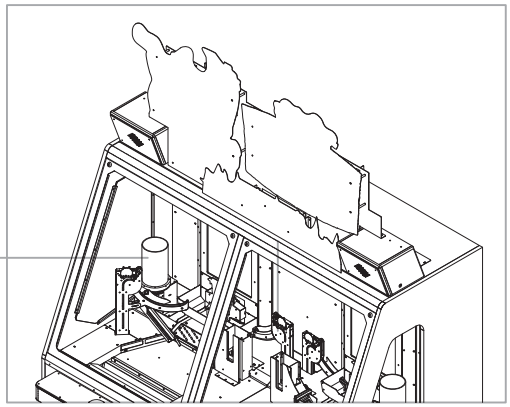

CHIP HOPPER ERROR [E.81]

TEST CHIP HOPPER — YES → DONE

NO

[HOW TO TEST]

1. TEST MODE > CHIP HOPPER
2. ON/OFF BY SELECT BUTTON
3. CHECK SUPER BONUS FND DISPLAY
   FND [■□□□] 1P HOPPER STATUS
   FND [□■□□] 1P NUMBER OF DISPENSED
   FND [□□■□] 2P HOPPER STATUS
   FND [□□□■] 2P NUMBER OF DISPENSED
4. CHECK DC VOLTAGE FROM INPUT TEST

CHECK CHIP HOPPER — NO →
1. RECONNECT CONNECTOR
2. REMOVE DEBRIS
3. ADJUST OR REPLACE

YES

[HOW TO CHECK]

1. CHECK HOPPER SENSOR CONNECTOR
2. CHECK IF THERE IS DEBRIS ON HOPPER SENSOR
3. CHECK THE POSITION OF SENSOR BRACKET

CHECK MAIN PCB — NO →
1. RECONNECT CONNECTOR
2. REPLACE MAIN PCB

YES

[HOW TO CEHCK]

1. CHECK CONNECTOR CN13
2. CHECK DC VOLTAGE OF CONNECTOR CN13
   1P) PIN 2 : 5V, PIN 5 : GND
   2P) PIN 7 : 5V, PIN 10 : GND
3. CHECK JOIN CONNECTOR

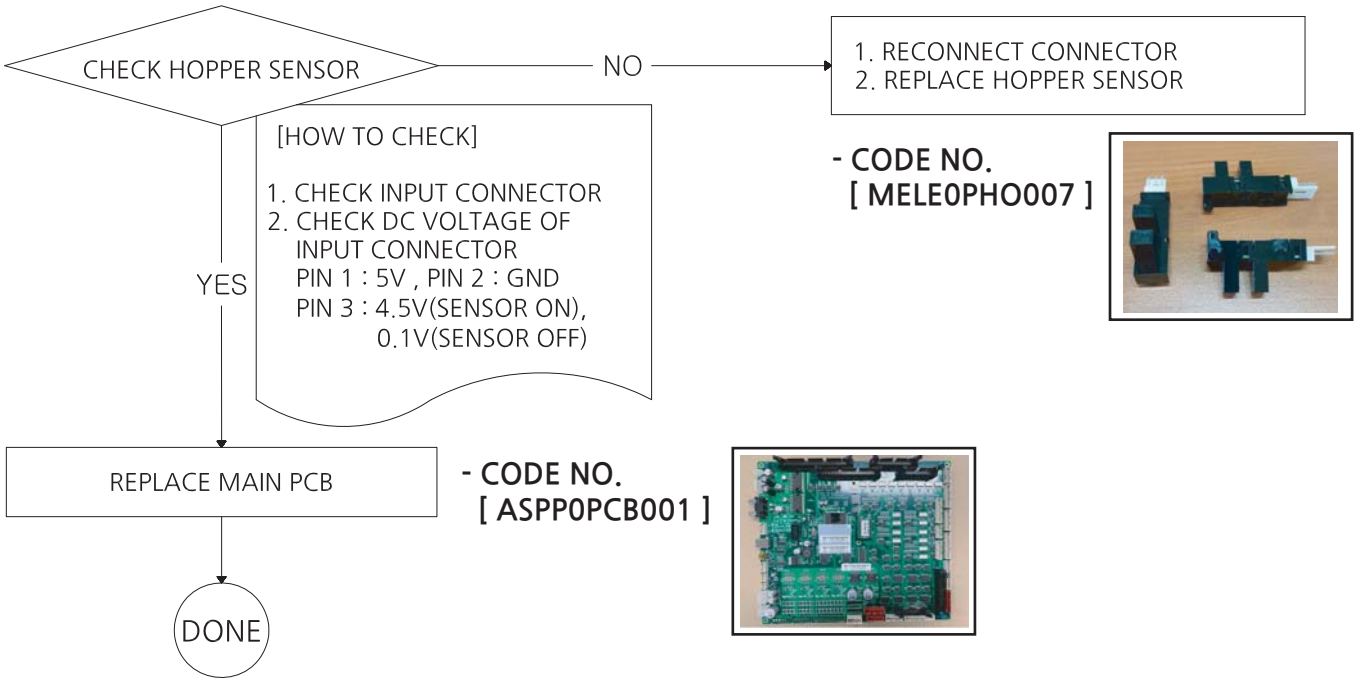
CHECK HOPPER SENSOR
NO
1. RECONNECT CONNECTOR
2. REPLACE HOPPER SENSOR
- CODE NO.
[MELE0PHO007]
[HOW TO CHECK]
1. CHECK INPUT CONNECTOR
2. CHECK DC VOLTAGE OF
INPUT CONNECTOR
PIN 1 : 5V , PIN 2 : GND
PIN 3 : 4.5V(SENSOR ON),
0.1V(SENSOR OFF)
YES
REPLACE MAIN PCB
- CODE NO.
[ASPP0PCB001]
DONE

5. EXPLODED VIEW

5-1. MAIN CABINET PART

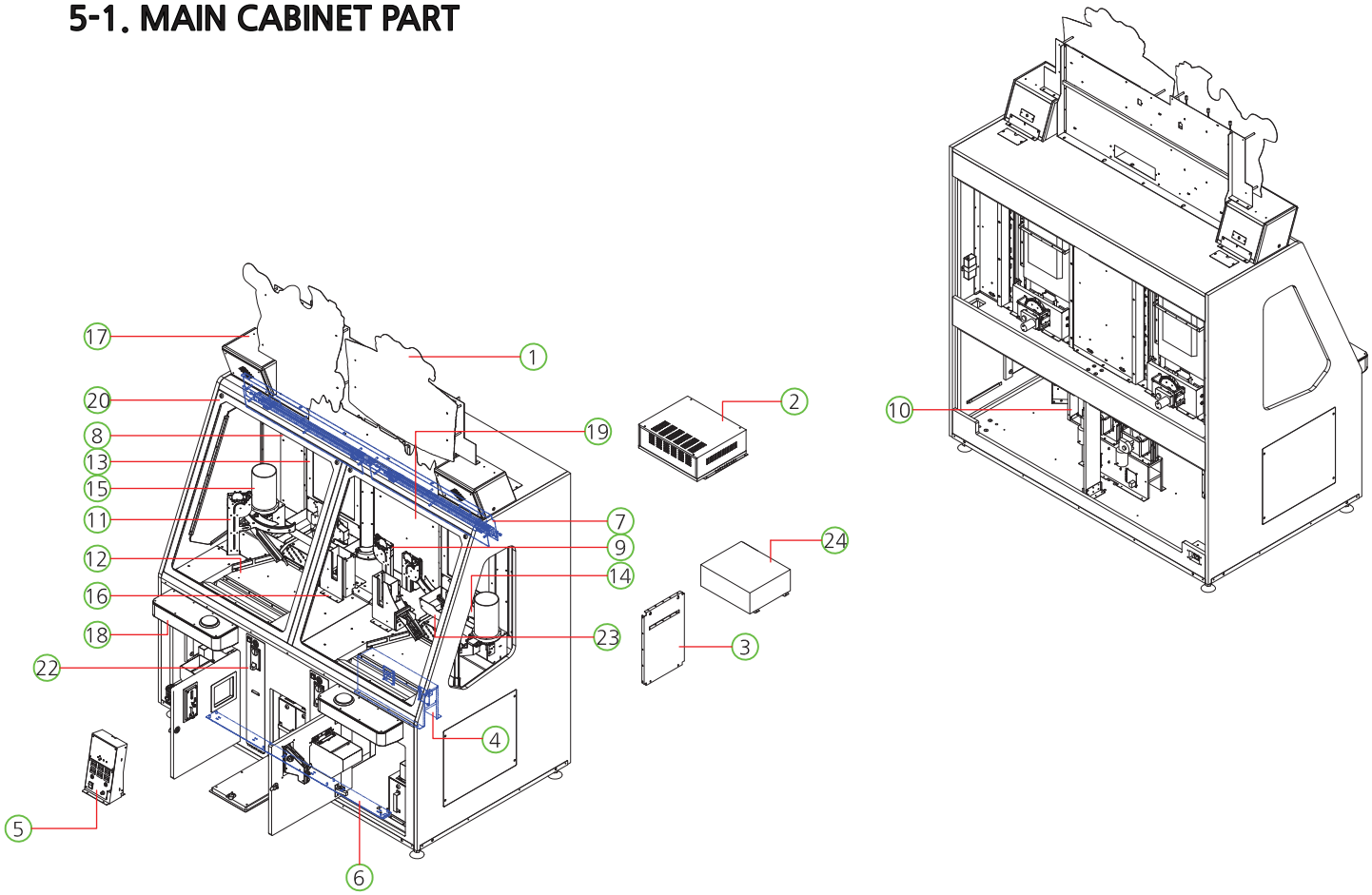

NO.	PART NAME	SPEC.	QUANTITY	CODE NO.
1	BILLBOARD PART	-	1	-
2	SMPS PART	-	1	-
3	MAIN BOARD PART	-	1	-
4	BBE ASS'Y SUPPORT BKT PART	-	1	-
5	CONTROL PANEL PART	-	1	-
6	CABINET BOTTOM FLEXIBLE LED PCB PART	-	1	-
7	CARD DISPLAY PART	-	1	-
8	CABINET MONITOR SIDE-L, R PART	-	2	-
9	BBE TOTAL PART	-	2	-
10	BCE TOTAL PART	-	2	-
11	BSE TOTAL PART	-	2	-
12	PUSHER PLATE PART	-	2	-
13	MONITOR PLATE PART	-	2	-
14	BONUS TARGET PART	-	2	-
15	CHIP HOPPER PART	-	2	-
16	CARD DISPENSER PART	-	2	-
17	SPEAKER PART	-	2	-
18	BUTTON PLATE PART	-	2	-
19	MIDDLE DISPLAY PART	-	1	-
20	FRONT UPPER DOOR PART	-	2	-
21	FRONT LOWER DOOR PART	-	2	-
22	TICKET DOOR PART	-	2	-
23	BALL FENCE PART L, R	-	2	-
24	MAIN BOX ASS'Y	-	1	-

5-2. BILLBOARD PART

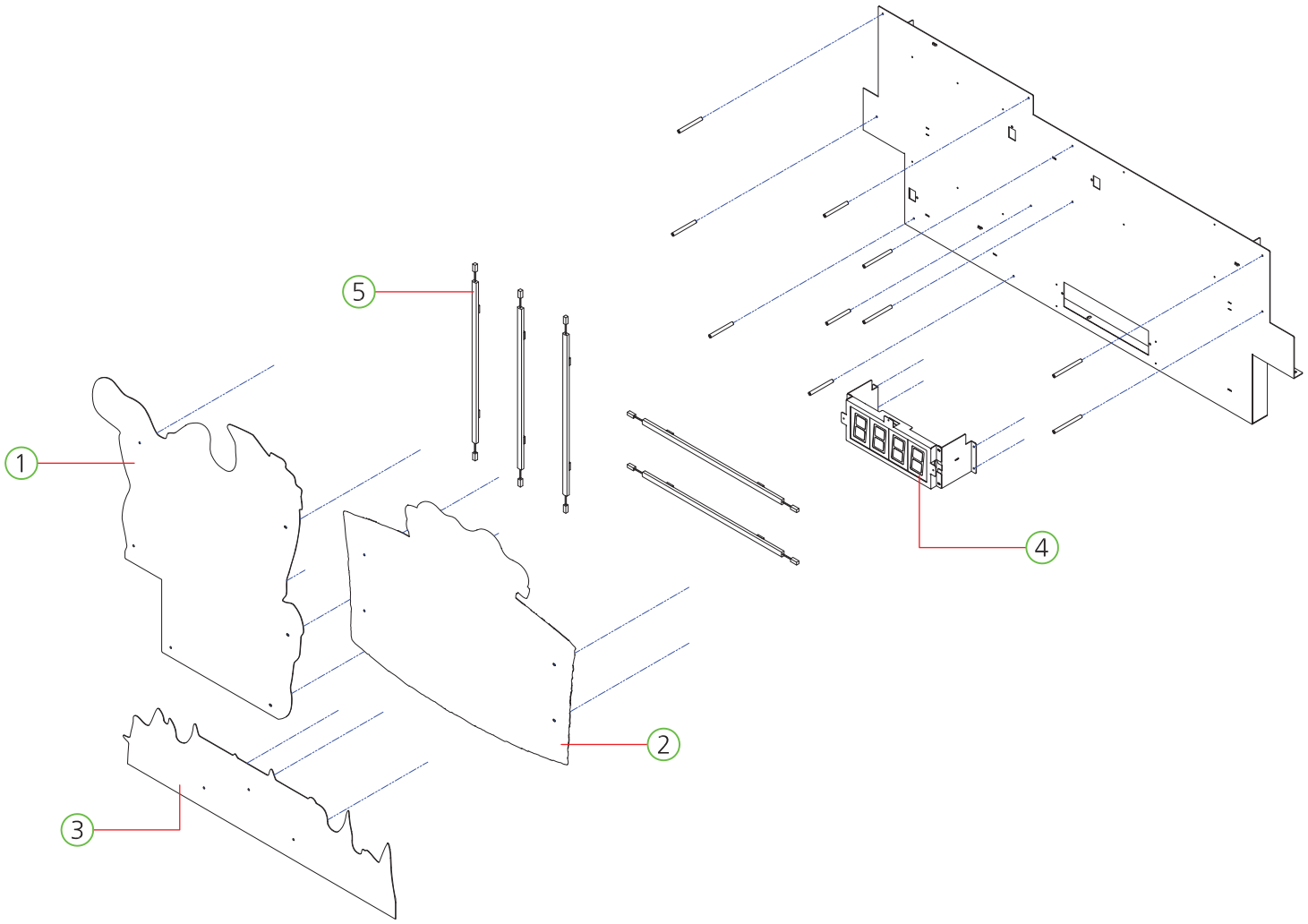

NO.	PART NAME	SPEC.	QUANTITY	CODE NO.
1	BILLBOARD LEFT SIDE ACRYL	PET-1.5t	1	ASPG0ACP006
2	BILLBOARD RIGHT SIDE ACRYL	PET-1.5t	1	ASPG0ACP007
3	BILLBOARD FND COVER ACRYL	PET-1.5t	1	ASPG0ACP005
4	FND PCB ASS'Y	6390-4(STRAIGHT)	1	AFND0PCB011
5	12V_LED BAR PCB ASS'Y	460mm	5	AZZZ0PCB124

5-3. SMPS PART

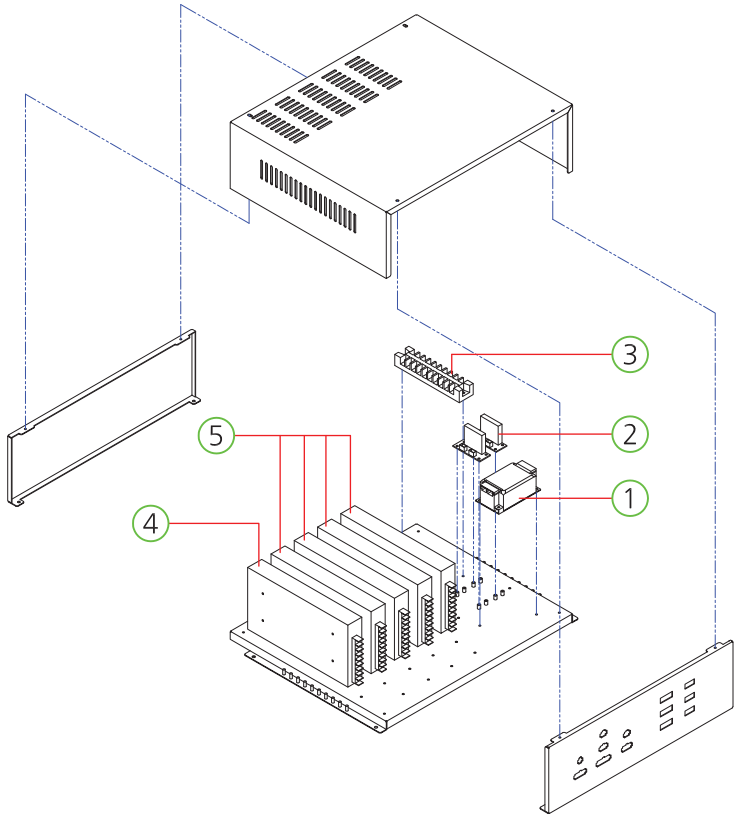

NO.	PART NAME	SPEC.	QUANTITY	CODE NO.
1	NOISE FILTER	RNS-2010	1	MELE0NOI009
2	AC MOTOR SSR PCB ASS'Y	-	2	AENS0PCB001
3	TERMINAL BLOCK	250V 10P	1	MELE0TEB003
4	POWER SMPS	RSP-320-5	1	MELE0SMP126
5	POWER SMPS	RSP-320-12	4	MELE0SMP109

5-4. MAIN BOARD PART

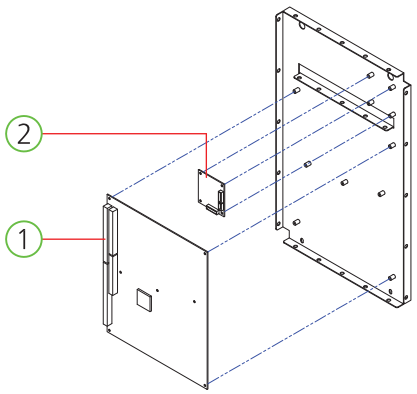

5-5. BBE ASS'Y SUPPORT BKT PART

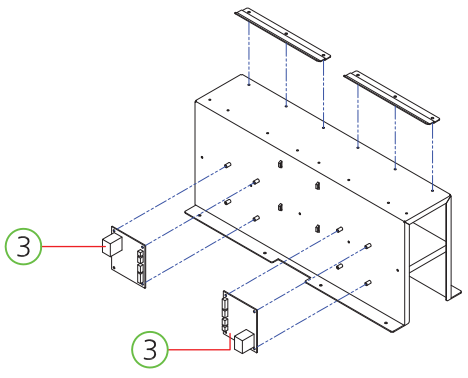

NO.	PART NAME	SPEC.	QUANTITY	CODE NO.
1	MAIN BOARD PCB ASS'Y	WITH CPU	1	ASPP0PCB001
2	SERIAL HUB PCB ASS'Y	-	1	AZZZ0PCB194
3	L6205 HOPPER PCB ASS'Y	-	2	AZZZ0PCB141

5-6. CONTROL PANEL PART

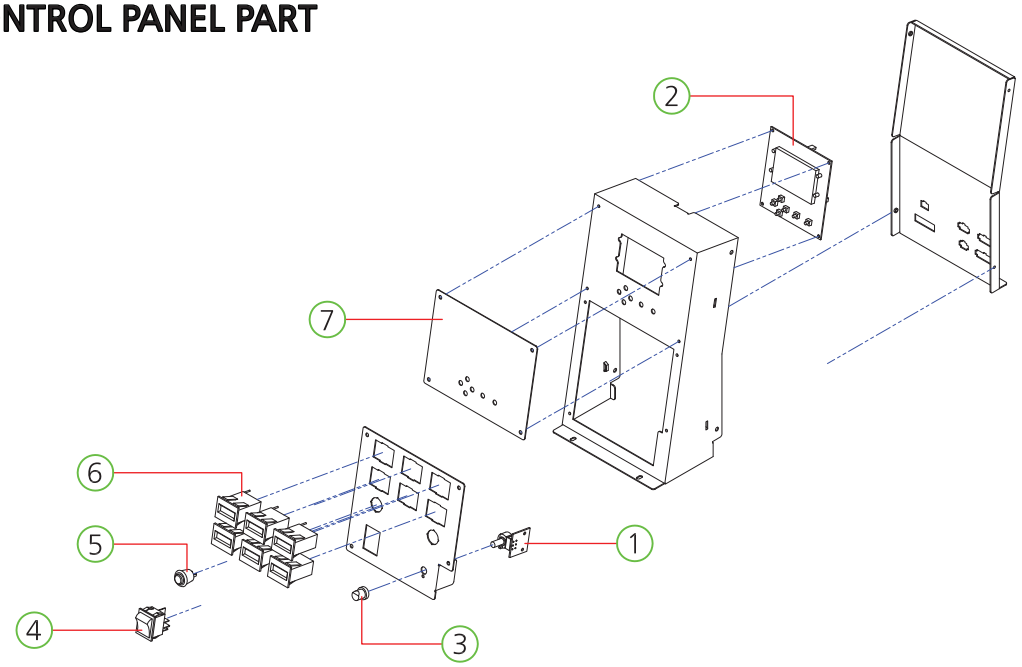

NO.	PART NAME	SPEC.	QUANTITY	CODE NO.
1	VOLUME PCB ASS'Y	-	1	AHM20PCB016
2	SETUP LCD PCB ASS'Y	-	1	AZZZ0PCB113
3	VOLUME KNOB	-	1	MELE0VOL007
4	ROCKER SWITCH	R595KDF	1	MELE0SWI021
5	PUSH BUTTON SWITCH	DS-412R	1	MELE0PUS006
6	VOLUME KNOB	-	6	MELE0VOL007
7	CONTROL PANEL COVER ACRYL	-	1	ASPG0ACP022

5-7. CABINET BOTTOM FLEXIBLE LED PCB PART

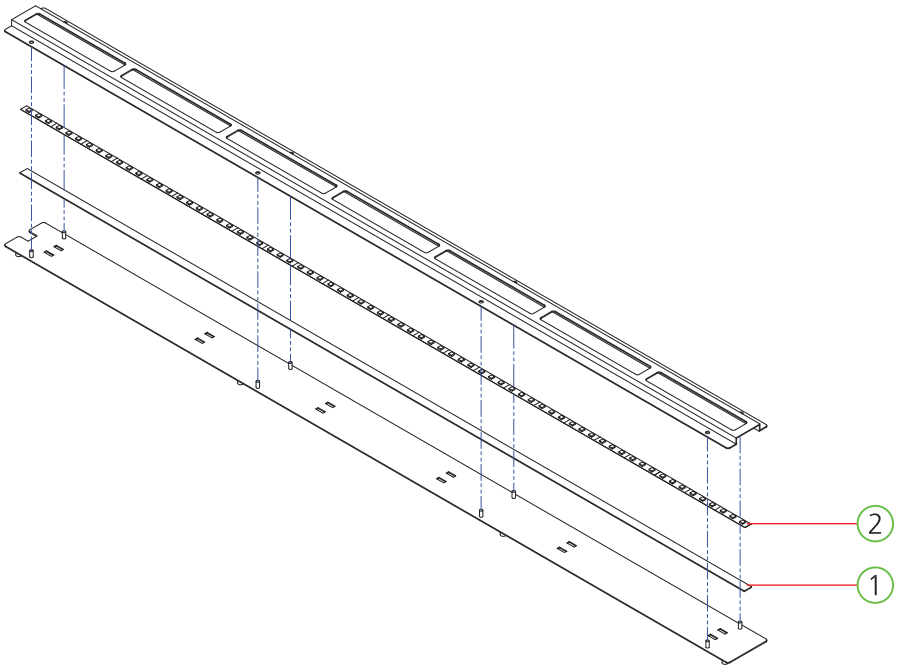

NO.	PART NAME	SPEC.	QUANTITY	CODE NO.
1	CABINET BOTTOM LED FIX ACRYL	PET-1.0t	1	MSPG0ACR012
2	FLEX_BLUE_1100_NWP_L	T5050	1	MELE0LED080

5-8. CARD DISPLAY PART

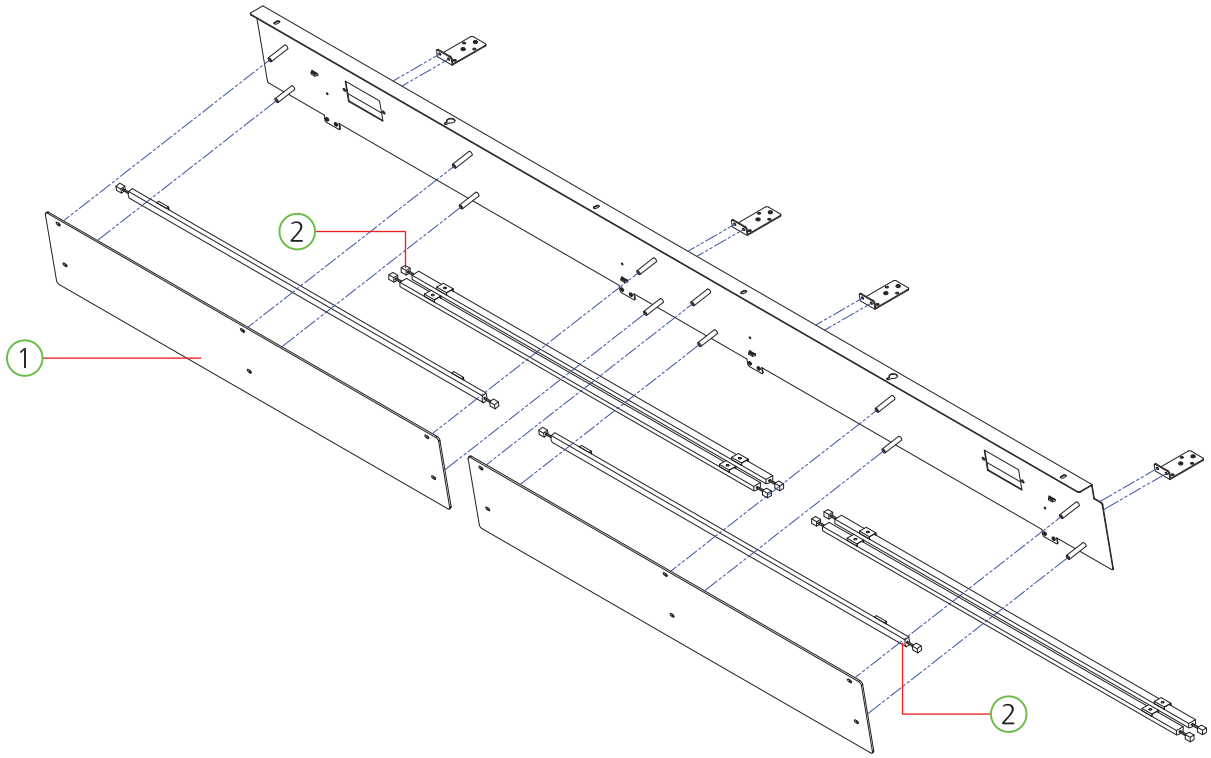

NO.	PART NAME	SPEC.	QUANTITY	CODE NO.
1	CARD DISPLAY COVER ACRYL	ACRYL-2.7t	2	ASPG0ACP014
2	12V_LED BAR PCB ASS'Y	710mm	6	AZZZ0PCB165

5-9. CABINET MONITOR SIDE-L, R PART

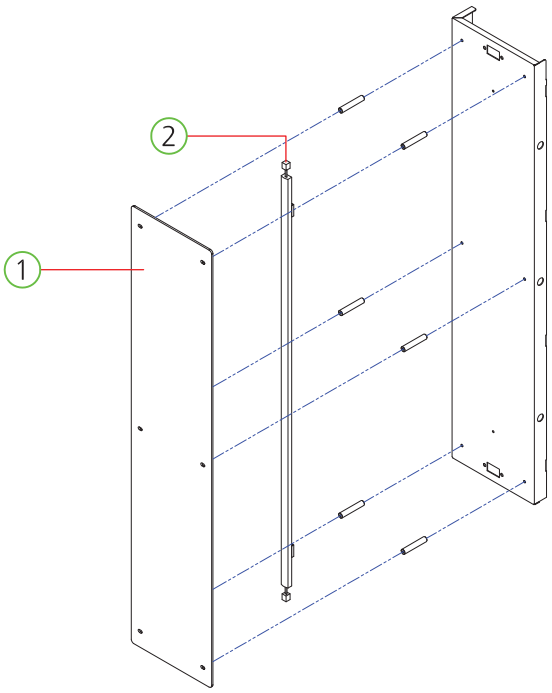

NO.	PART NAME	SPEC.	QUANTITY	CODE NO.
1	CABINET MONITOR SIDE ACRYL-L	ACRYL-2.7t	1	ASPG0ACP010
2	12V_LED BAR PCB ASS'Y	710mm	1	AZZZ0PCB165

5-10. BBE TOTAL PART

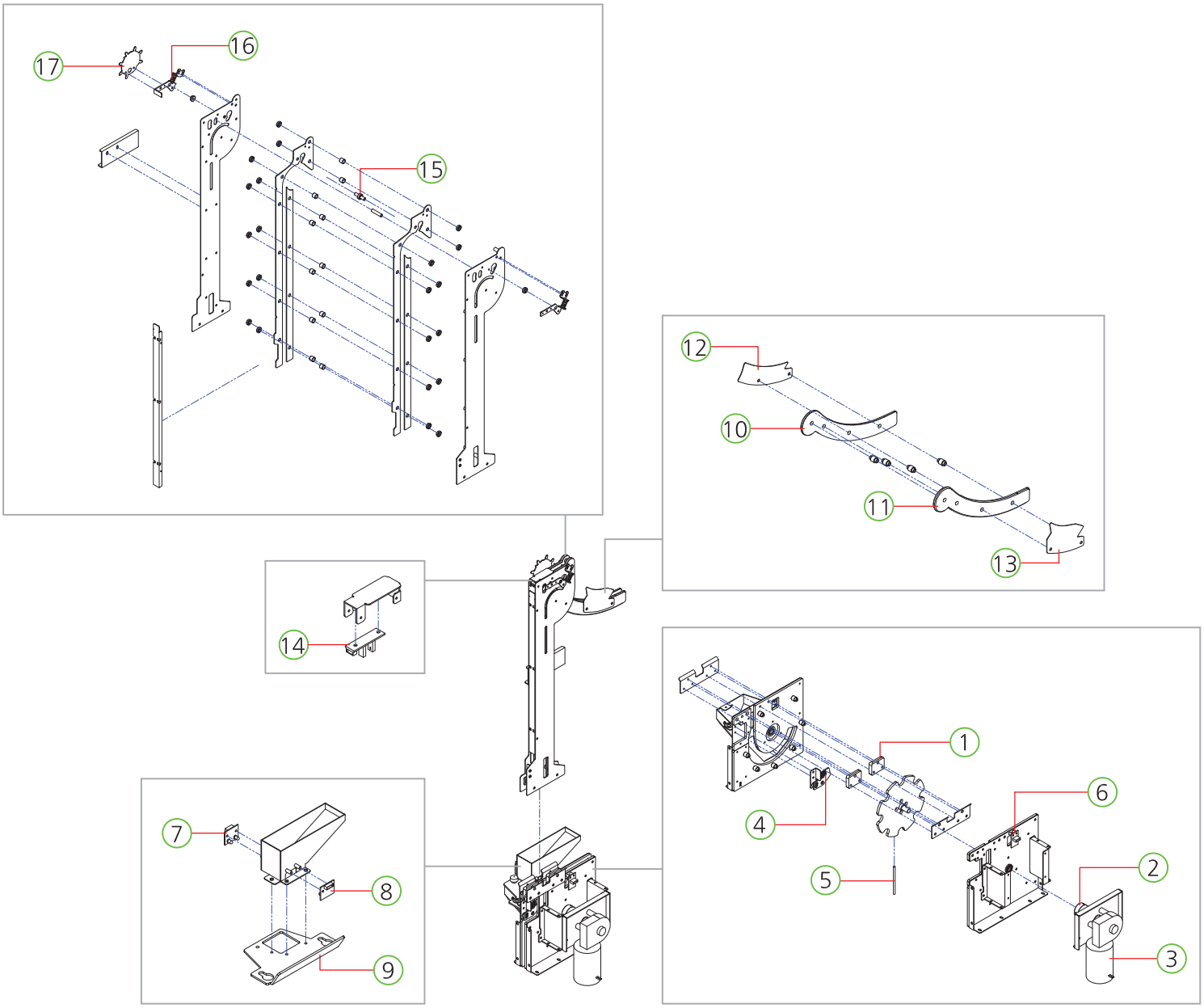

NO.	PART NAME	SPEC.	QUANTITY	CODE NO.
1	BSE MOVEMENT SPACER ACRYL	ACRYL-8.0t	2	MSPG0ACR005
2	COUPLING	JOC30	1	MZZZ0COP002
3	MOTOR	HM37-1232A-M005 (12V, 32rpm)	1	MZZZ0MOT164
4	Z MOTOR PART TENSION SPRING	PW-Φ0.55	1	MWID0SPR001
5	BALL STIR AIR HOSE	Ø4x70mm_URETHANE	1	MSPG0ZZZ001
6	ELEVATOR DISK SENSOR PCB ASS'Y	-	1	AGHP0PCB020
7	WHEEL FAIL BALL CHECK PCB_RECEIVER	-	1	ASPP0PCB004
8	WHEEL FAIL BALL CHECK PCB_EMITTER	-	1	ASPP0PCB003
9	BBE HOUSING COVER ACRYL-R	PC-3.0t	1	MSPG0ACR009
10	BBE CHUTE SIDE ACRYL-L	ACRYL-4.7t	1	MSPG0ACR006
11	BBE CHUTE SIDE ACRYL-R	ACRYL-4.7t	1	MSPG0ACR007
12	BBE CHUTE FRONT COVER ACRYL	PET-1.0t	1	MSPG0ACR045
13	BBE CHUTE SIDE DECO ACRYL-L	PET-1.0t	1	ASPG0ACP001
14	PHOTO INT-1 PCB ASS'Y	ANGLE TYPE	1	AZZZ0PCB103
15	BEARING	MR126ZZ	1	MZZZ0BEA005
16	Z MOTOR PART TENSION SPRING	PW-Φ0.55	2	MWID0SPR001
17	BSE TOP SIDE ACRYL-R	PET-1.0t	1	ASPG0ACP004

5-11. BCE TOTAL PART

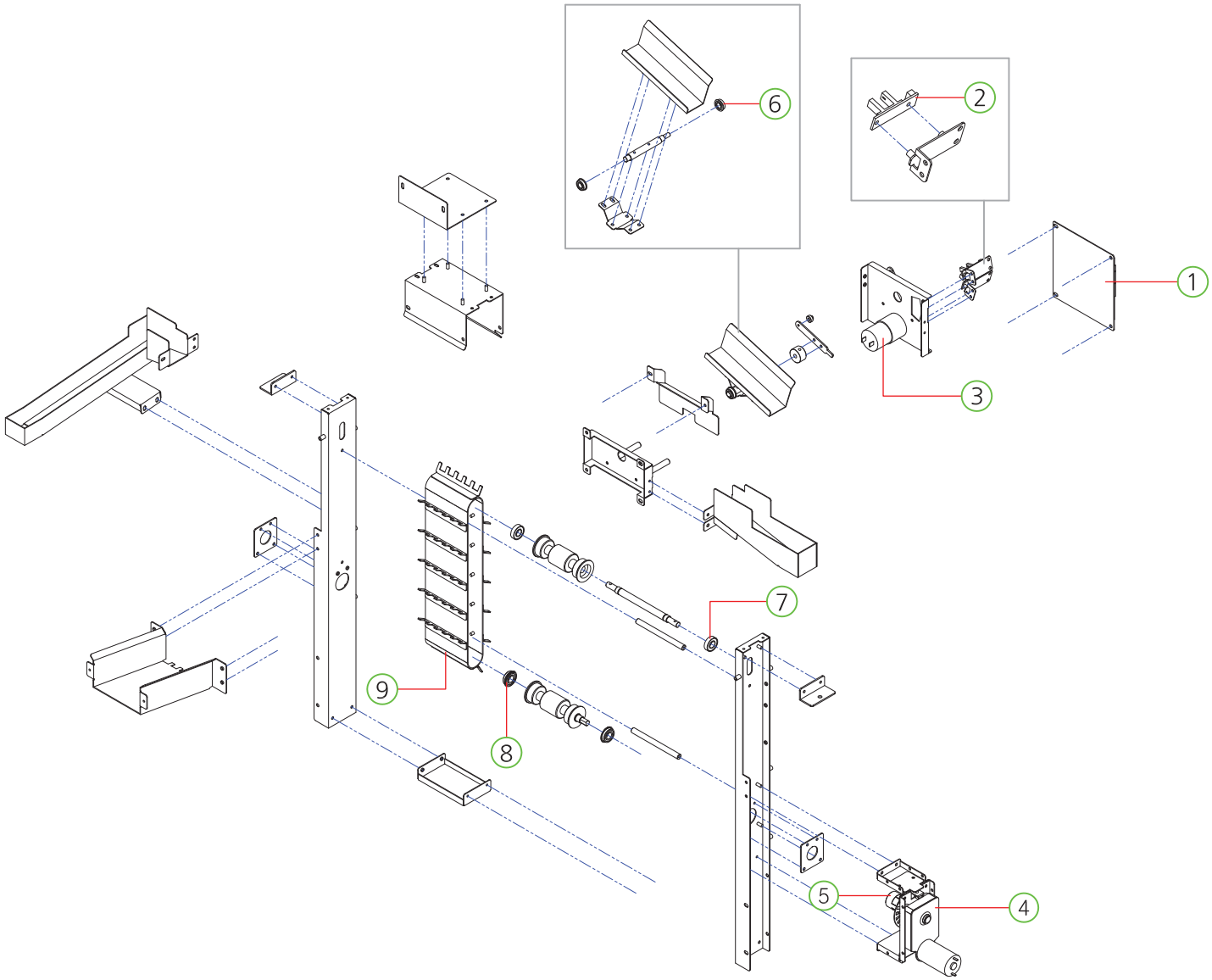

NO.	PART NAME	SPEC.	QUANTITY	CODE NO.
1	MOTOR DRIVER IO PCB ASS'Y	-	1	ASPP0PCB002
2	PHOTO INT-1 PCB ASS'Y	ANGLE TYPE	1	AZZZ0PCB103
3	MOTOR	KGC-3429(KD1-3429-075), 1/210(31RPM)	1	MZZZ0MOT088
4	MOTOR	KGE-0116-ND3657 U1 (12V, 43rpm)	1	MZZZ0MOT155
5	COUPLING	CR050	1	AZZZ0COP001
6	BEARING	F688ZZ	2	MZZZ0BEA076
7	BEARING	6900ZZ(D22d10t6)	2	MZZZ0BEA007
8	BEARING	6900ZZNR(D22d10t6)	2	MZZZ0BEA129
9	BCE CONVEYOR BELT	-	1	MSPP0BEL001

5-12. BSE TOTAL PART

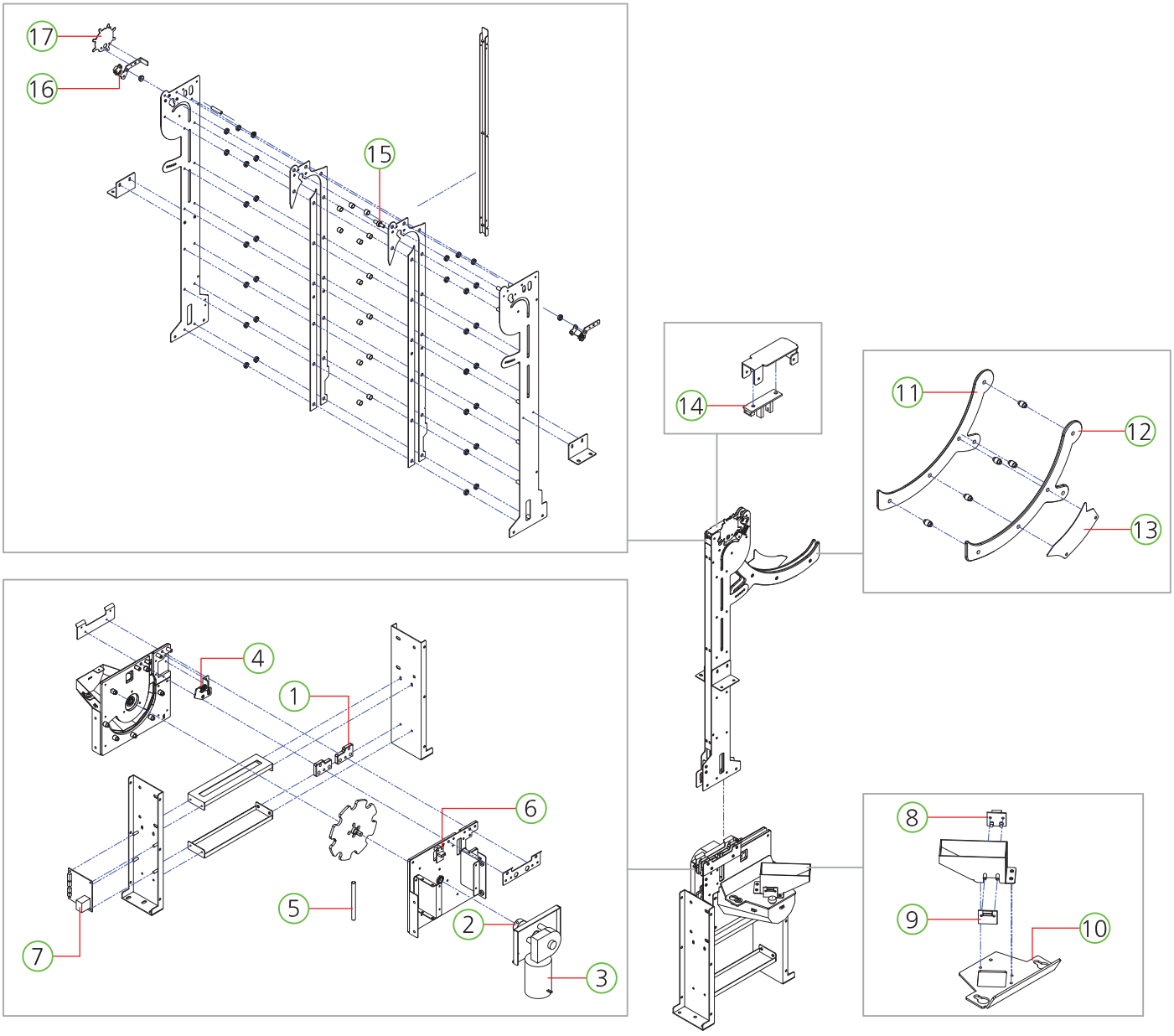

NO.	PART NAME	SPEC.	QUANTITY	CODE NO.
1	BSE MOVEMENT SPACER ACRYL	ACRYL-8.0t	2	MSPG0ACR005
2	COUPLING	JOC30	1	MZZZ0COP002
3	MOTOR	HM37-1232A-M005 (12V, 32rpm)	1	MZZZ0MOT164
4	Z MOTOR PART TENSION SPRING	PW-Φ0.55	1	MWID0SPR001
5	BALL STIR AIR HOSE	Ø4x70mm_URETHANE	1	MSPG0ZZZ001
6	ELEVATOR DISK SENSOR PCB ASS'Y	-	1	AGHP0PCB020
7	L6205 HOPPER PCB ASS'Y	-	1	AZZZ0PCB141
8	WHEEL FAIL BALL CHECK PCB_RECEIVER	-	1	ASPP0PCB004
9	WHEEL FAIL BALL CHECK PCB_EMITTER	-	1	ASPP0PCB003
10	BBE HOUSING COVER ACRYL-R	PC-3.0t	1	MSPG0ACR009
11	BBE CHUTE SIDE ACRYL-R	ACRYL-4.7t	1	MSPG0ACR002
12	BBE CHUTE SIDE ACRYL-L	ACRYL-4.7t	1	MSPG0ACR001
13	BSE CHUTE SIDE DECO ACRYL-L	PET-1.0t	1	ASPG0ACP020
14	PHOTO INT-1 PCB ASS'Y	ANGLE TYPE	1	AZZZ0PCB103
15	BEARING	MR126ZZ	1	MZZZ0BEA005
16	Z MOTOR PART TENSION SPRING	PW-Φ0.55	2	MWID0SPR001
17	BSE TOP SIDE ACRYL-L	PET-1.0t	1	ASPG0ACP003

5-13. PUSHER PLATE PART

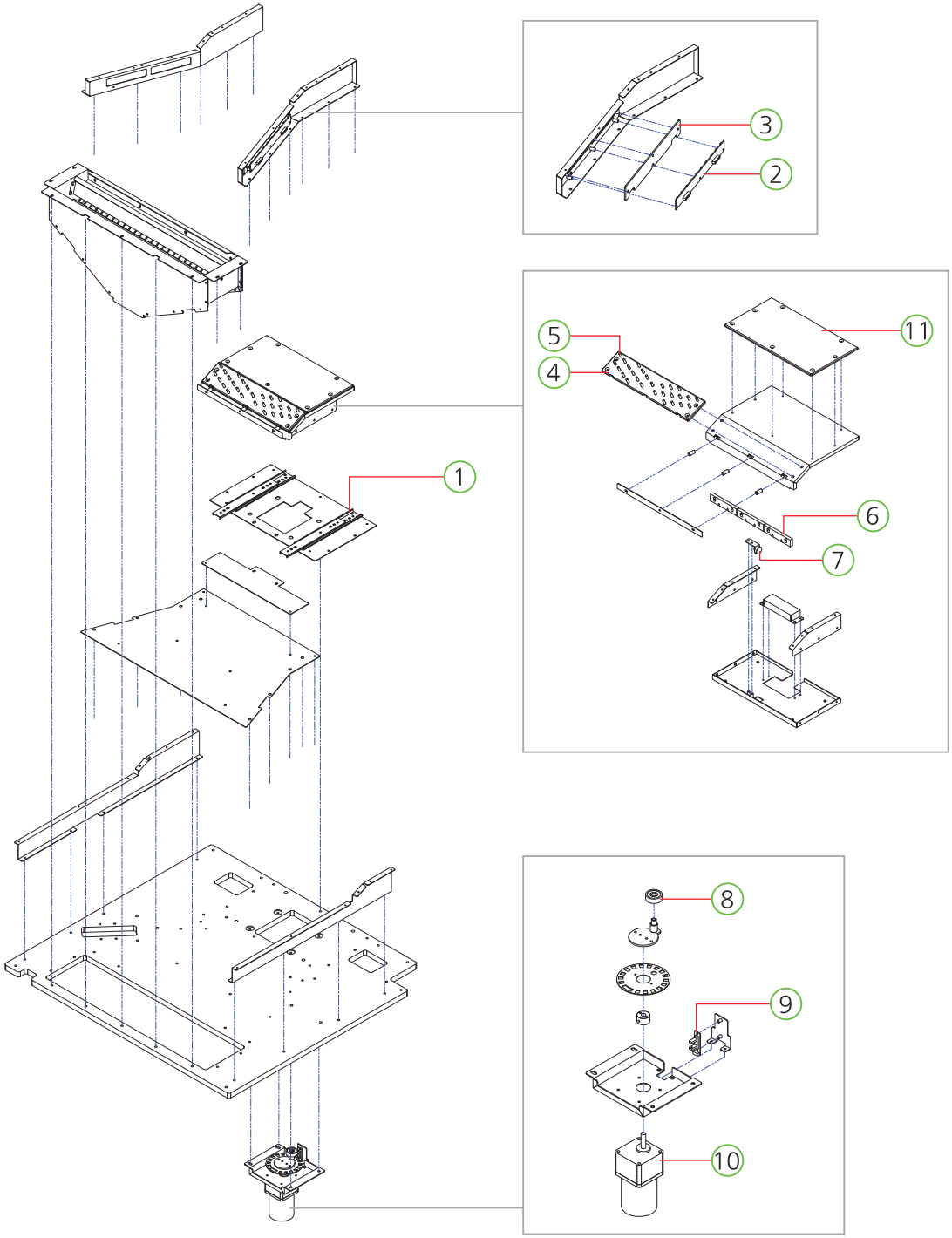

NO.	PART NAME	SPEC.	QUANTITY	CODE NO.
1	LINER	200mm	2	MSBP0ZZZ011
2	MONITOR SIDE LED PCB ASS'Y	-	2	ASPP0PCB005
3	PUSHER SIDE LED PCB COVER ACRYL L, R	ACRYL-2.7t	2	MSPG0ACR172, 171
4	UPPER PUSHER PLATE FRONT COVER ACRYL	ACRYL-4.7t	1	MSPG0ACR020
5	PIN SHAFT MOLD	PC	1	MGHP0PLA004
6	PUSHER CHIP FENCE BLOCK	ACETAL-8.0t	3	MSPG0PRO021
7	BEARING	DR-19B	1	MZZZ0BEA117
8	BEARING	638ZZ	1	MZZZ0BEA064
9	PHOTO INT-1 PCB ASS'Y	ANGLE TYPE	1	AZZZ0PCB103
10	AC MOTOR	K6IG6NC	1	MZZZ0MOT094
	[GEAR HEAD]	K6G90C	1	MSAW0ZZZ008
11	UPPER PUSHER PLATE TOP COVER ACRYL	ACRYL-4.7t	1	MSPG0ACR021

5-14. MONITOR PLATE PART

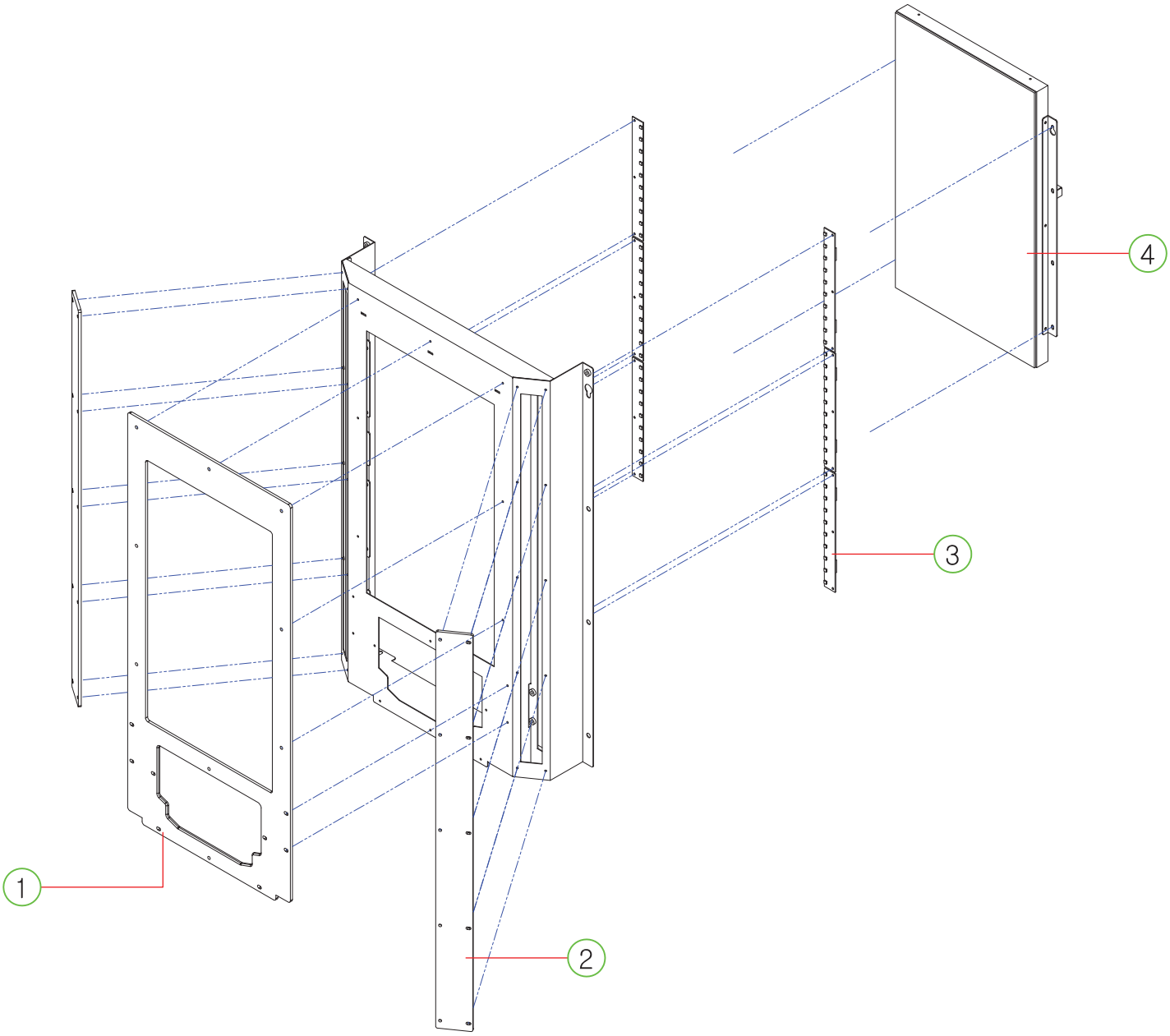

NO.	PART NAME	SPEC.	QUANTITY	CODE NO.
1	MONITOR BEZEL ACRYL	ACRYL-4.7t	1	ASPG0ACP016
2	MONITOR SIDE COVER ACRYL	ACRYL-4.7t	2	MSPG0ACR017
3	MONITOR SIDE LED PCB ASS'Y	-	6	ASPP0PCB005
4	MONITOR	23"	1	MZZZ0LCD017

5-15. BONUS TARGET PART

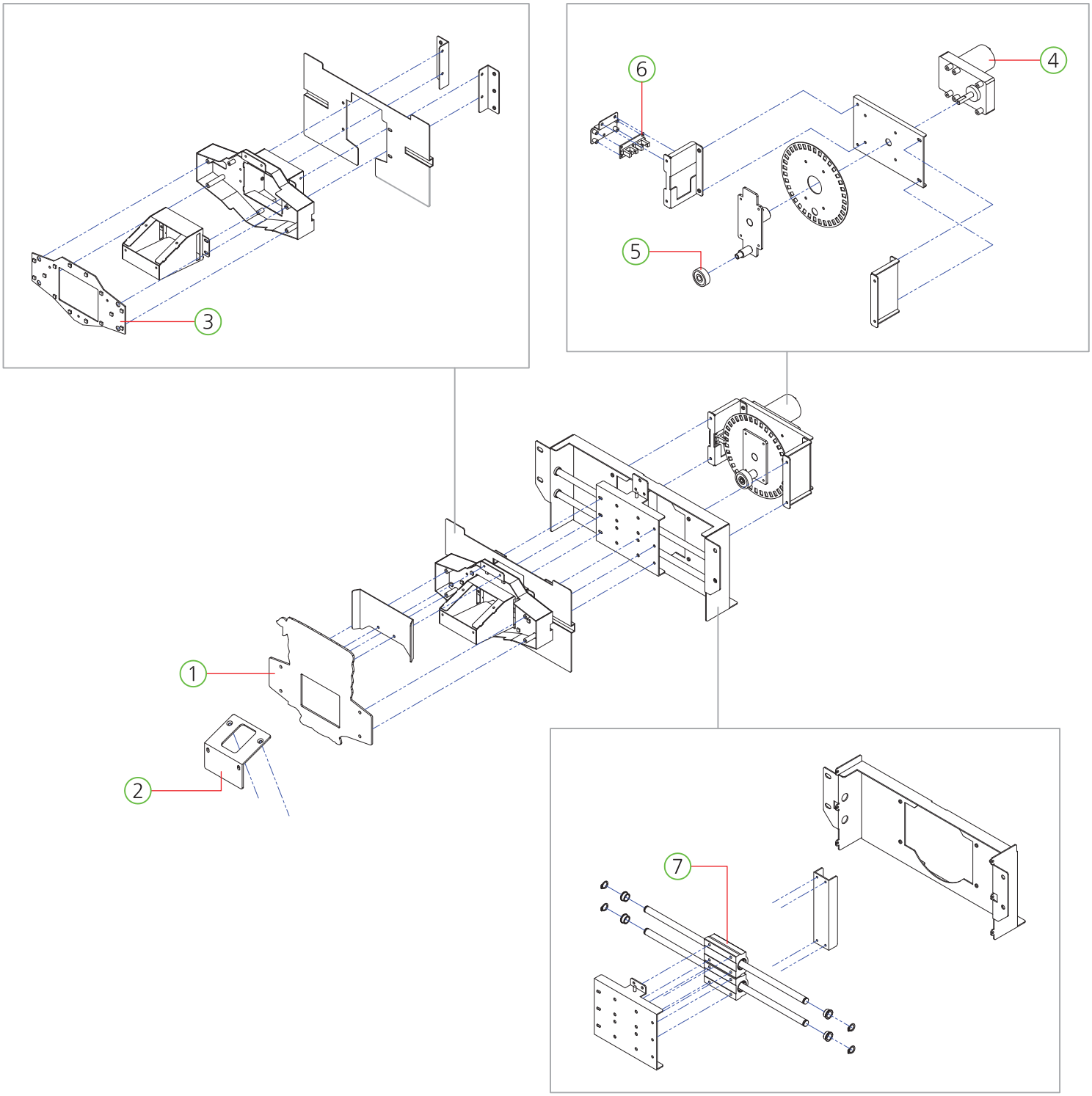

NO.	PART NAME	SPEC.	QUANTITY	CODE NO.
1	BONUS TARGET FRONT ACRYL	ACRYL-2.7t	1	ASPG0ACP019
2	BONUS TARGET CHECKER COVER ACRYL	ACRYL-2.7t	1	ASPG0ACP018
3	BONUS TARGET SENSOR PCB ASS'Y	-	1	AWWE0PCB005
4	MOTOR	KGV-0120-ND3657 U1	1	MZZZ0MOT141
5	BEARING	638ZZ	1	MZZZ0BEA064
6	PHOTO INT2 PCB ASS'Y	-	1	AWIW0PCB009
7	LM BEARING	SL 10UU	2	MZZZ0BEA125

5-16. CHIP HOPPER PART

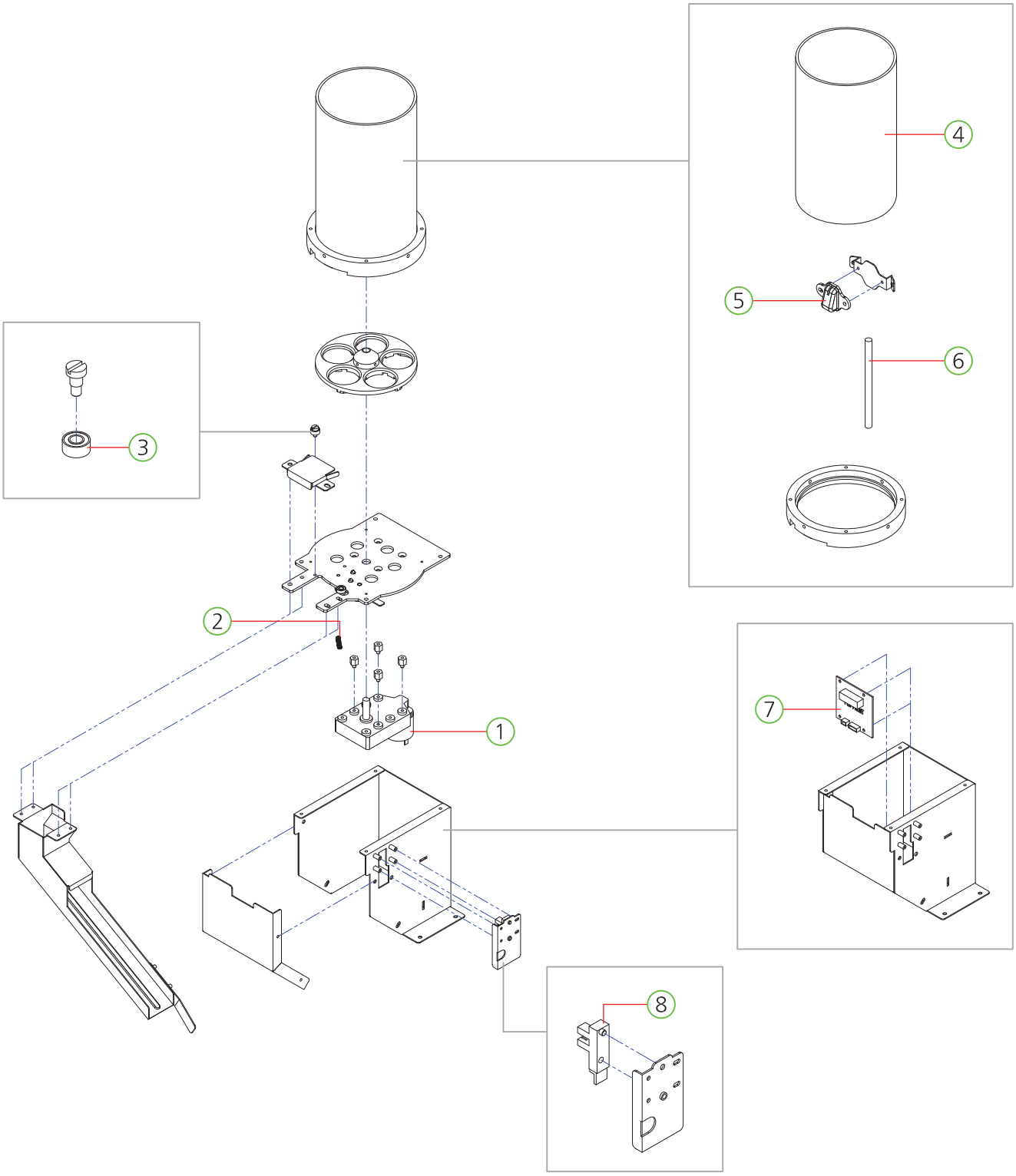

NO.	PART NAME	SPEC.	QUANTITY	CODE NO.
1	MOTOR	KGE-0162-KD3429T1-SSF	1	MZZZ0MOT134
2	CHIP HOPPER SPRING	SUS-Φ0.5	1	MZZZ0SPR002
3	BEARING	685ZZ	1	MZZZ0BEA107
4	CHIP HOPPER PIPE	ACRYL PIPE	1	MZZZ0HOP040
5	HOPPER RAIL BALL GUIDE	ABS-2T	1	MZZZ0ELH031
6	COIN BOWL BAFFLE BAR	PVC	1	MZZZ0ELH038
7	CHIP HOPPER PCB ASS'Y	-	1	AZZZ0PCB153
8	PHOTO SENSOR	LG-217L3	1	MELE0PHO007

5-17. CARD DISPENSOR PART

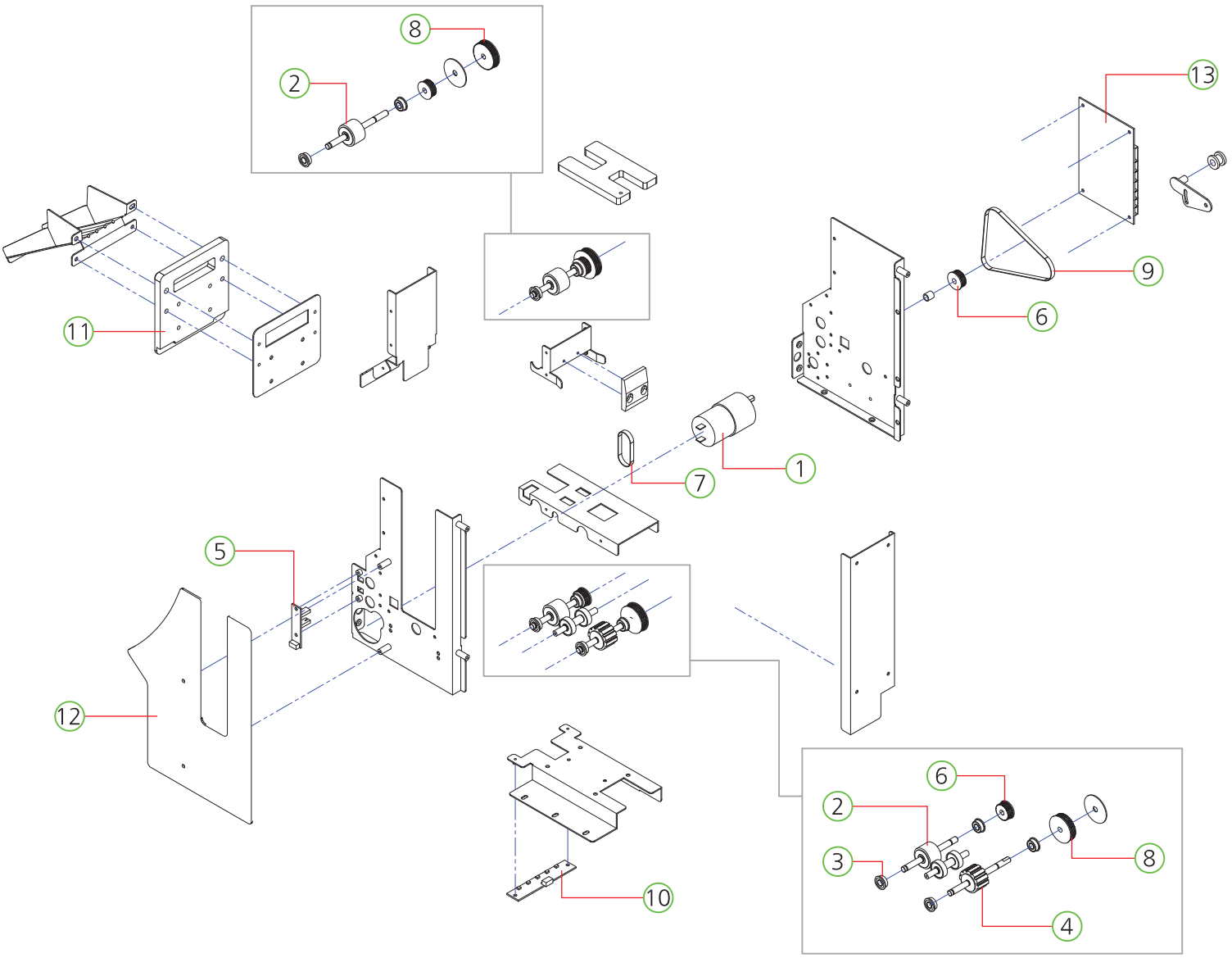

NO.	PART NAME	SPEC.	QUANTITY	CODE NO.
1	MOTOR	KGC-3429(KD1-3429-075), 1/40(163RPM)	1	MZZZ0MOT089
2	CARD DISPENSER RUBBER HOUSING-A	SILICON	2	MZZZ0RUB017
3	BEARING	F686ZZ	6	MZZZ0BEA094
4	CARD DISPENSER RUBBER HOUSING-B	SILICON	1	MZZZ0RUB018
5	PHOTO INT-1 PCB ASS'Y	ANGLE TYPE	1	AZZZ0PCB103
6	TIMMING PULLEY-A	MXL-29	2	MZZZ0PLA040
7	CARD DISPENSER TIMMING BELT-A	52MXL	1	MZZZ0BEL018
8	CARD ROLLER SHAFT TIMMING PULLEY-B	MXL-47	2	MZZZ0PLA039
9	CARD DISPENSER TIMMING BELT-B	147MXL	1	MZZZ0BEL019
10	LED PCB ASS'Y	-	1	AMUM0PCB005
11	CARD DISPENSER FRONT MASK ACRYL	ACRYL-10t	1	MSPG0ACR044
12	CARD DISPENSER SIDE COVER ACRYL-L	PET-2.0t	1	ASPG0ACP013
13	CARD DISPENSER IO PCB ASS'Y	-	1	ASBP0PCB008

5-18. SPEAKER PART

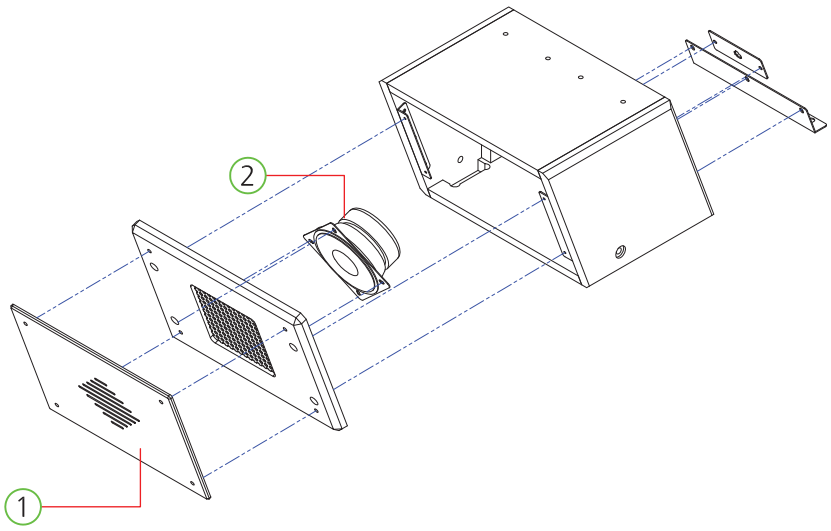

NO.	PART NAME	SPEC.	QUANTITY	CODE NO.
1	SPEAKER COVER ACRYL	ACRYL-4.7t	1	ASPG0ACP017
2	SPEAKER	MID4.5+TW1/2" 8Ω"	1	MZZZ0SPE021

5-19. BUTTON PLATE PART

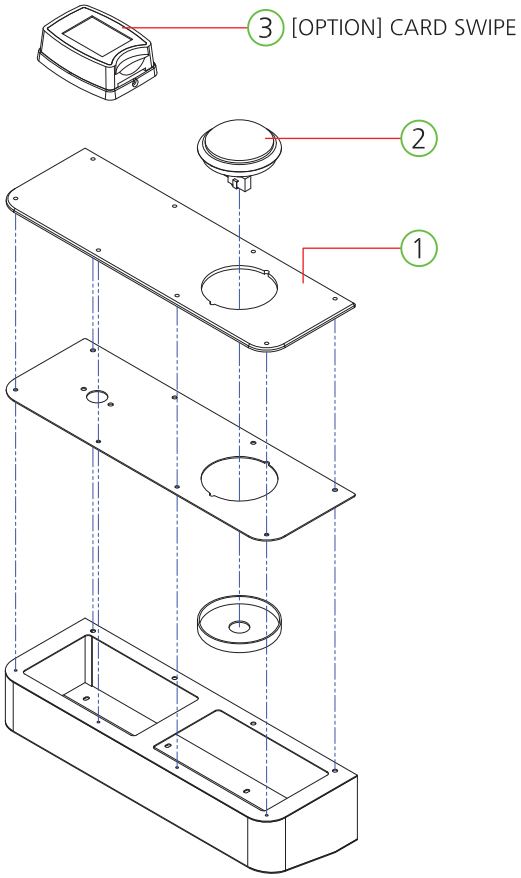

NO.	PART NAME	SPEC.	QUANTITY	CODE NO.
1	BUTTON PLATE COVER ACRYL-L	ACRYL-4.7t	1	ASPG0ACP008
2	BUTTON ASS'Y	CWB 401	1	MZZZ0BUT080
3	[OPTION] CARD SWIPE	-	1	-

5-20. MIDDLE DISPLAY PART

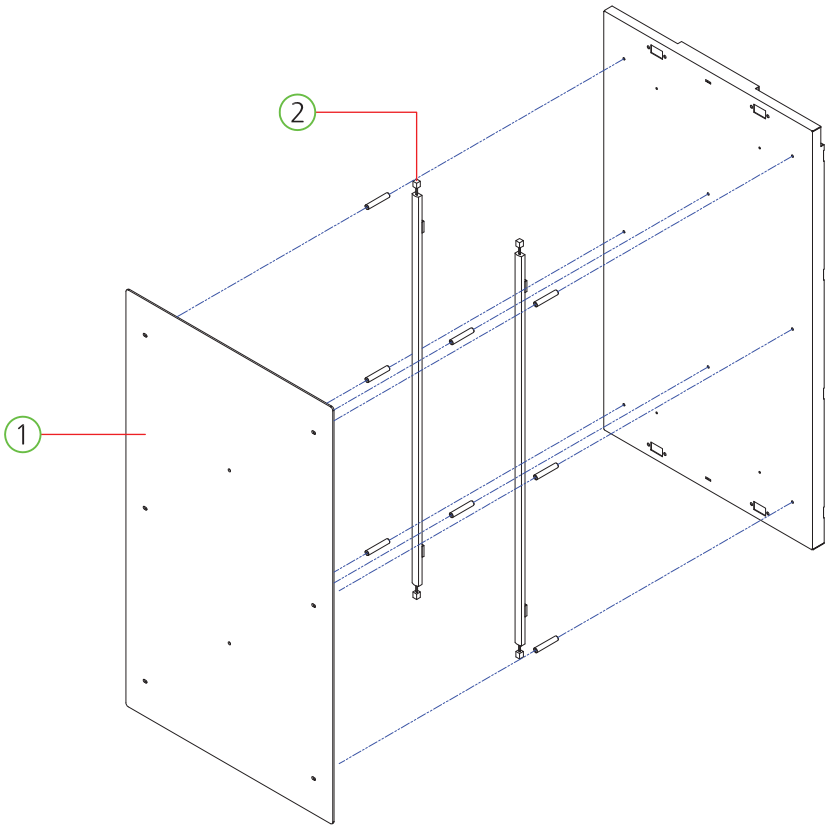

NO.	PART NAME	SPEC.	QUANTITY	CODE NO.
1	MIDDLE DISPLAY COVER ACRYL	ACRYL-2.7t	1	MSPG0ACR039
2	12V_LED BAR PCB ASS'Y	-	2	AZZZ0PCB165

5-21. FRONT UPPER DOOR PART

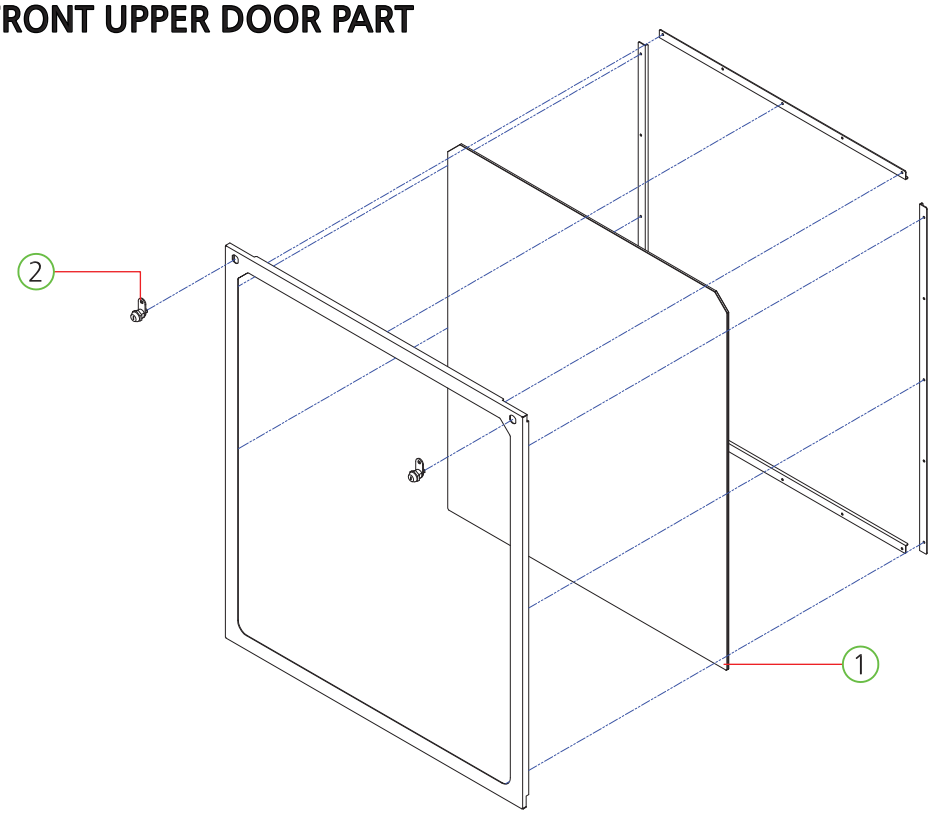

NO.	PART NAME	SPEC.	QUANTITY	CODE NO.
1	FRONT DOOR GLASS	TEMPERED-5.0t	1	MSPG0GLA001
2	KEY ASS'Y	7001	2	MZZZ0KEY076

5-22. FRONT LOWER DOOR PART

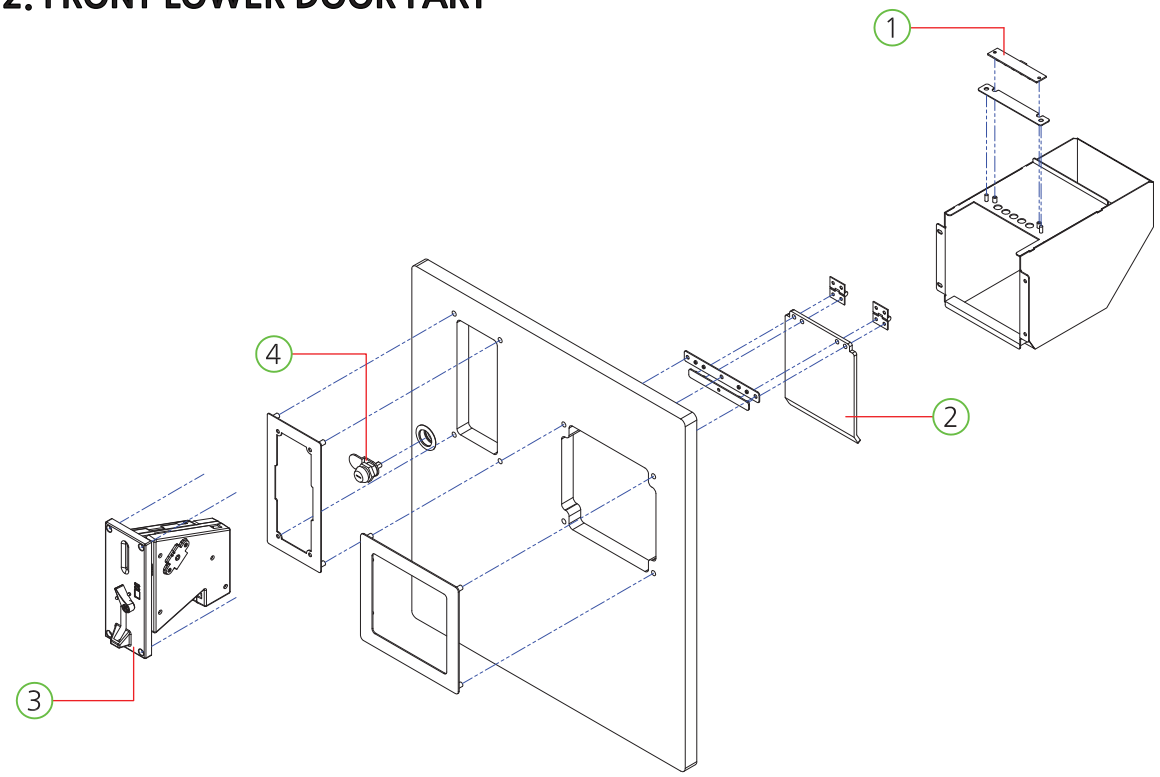

NO.	PART NAME	SPEC.	QUANTITY	CODE NO.
1	LED PCB ASS'Y	-	1	AMUM0PCB005
2	CARD OUT COVER ACRYL	ACRYL-4.7t	1	MSPG0ACR013
3	RFID CHIP READER	TW968	1	MSPG0PAR001
4	KEY ASS'Y	7001	1	MZZZ0KEY076

5-23. TICKET DOOR PART

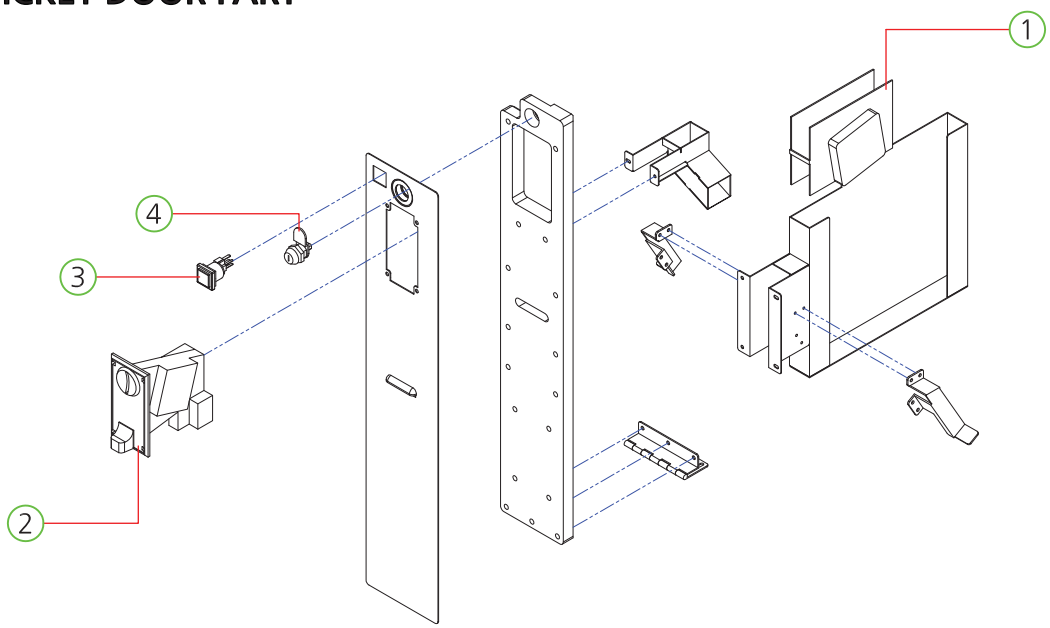

NO.	PART NAME	SPEC.	QUANTITY	CODE NO.
1	[OPTION] TICKET DISPENSOR	-	1	MZZZ0TID010
2	COIN SELECTOR	TW-389	1	MZZZ0COS052
3	BUTTON SWITCH	AMIPB-26HS-R12D	1	MMUM0BUT002
4	KEY ASS'Y	7001	1	MZZZ0KEY076

5-24. BALL FENCE PART L, R

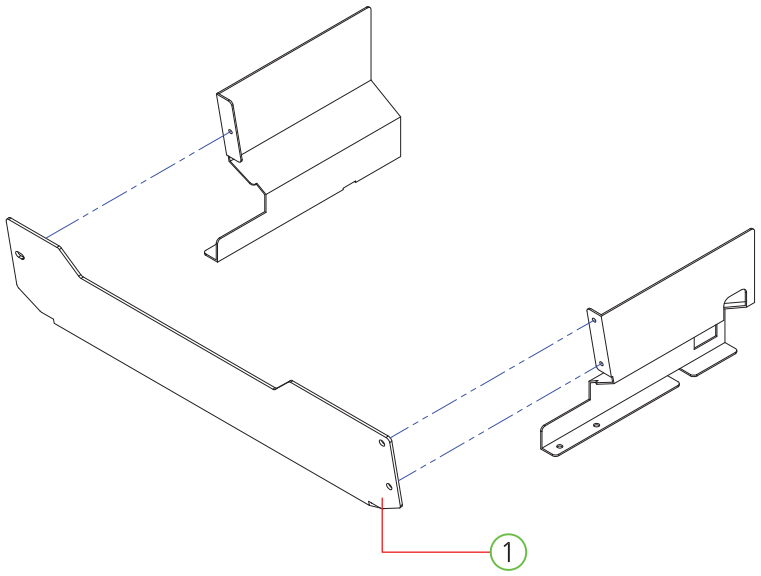

NO.	PART NAME	SPEC.	QUANTITY	CODE NO.
1	BALL FENCE ACRYL-L, R	PET-2.0t	1	MSPG0ACR010, 011

6. WARRANTY ITEM & PART PICTURE

- BILLBOARD PART

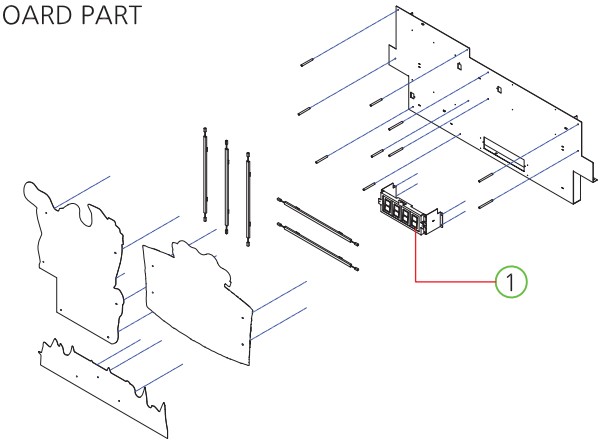

- SMPS PART

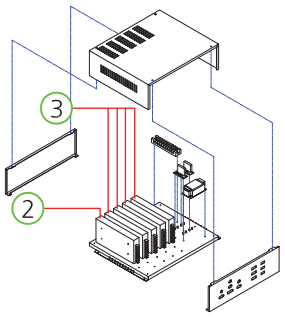

- MAIN BOARD PART

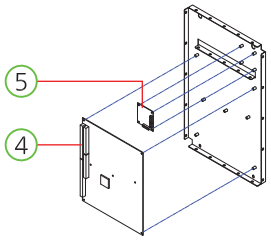

- BBE ASS'Y SUPPORT BKT PART

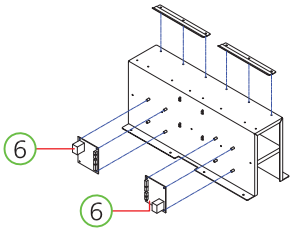

- CONTROL PANEL PART

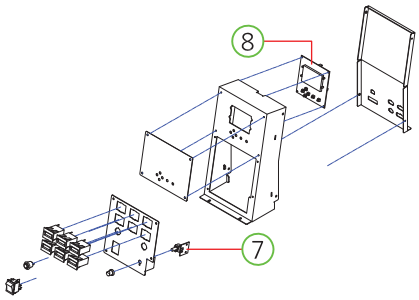

- BBE TOTAL PART

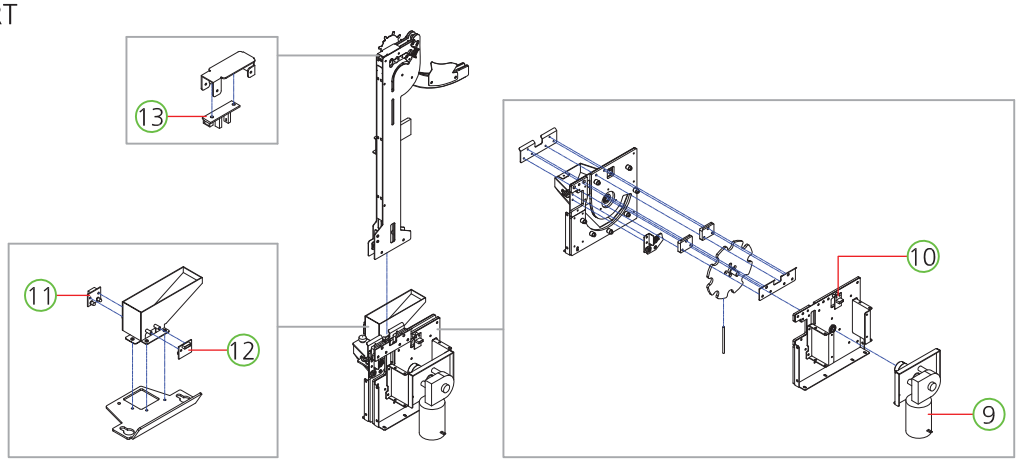

- BCE TOTAL PART

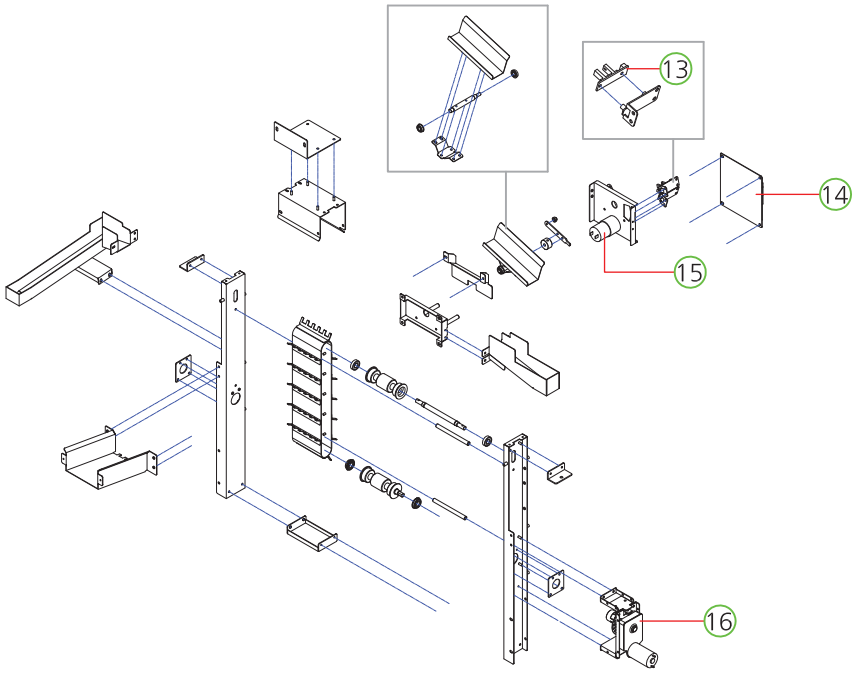

- BSE TOTAL PART

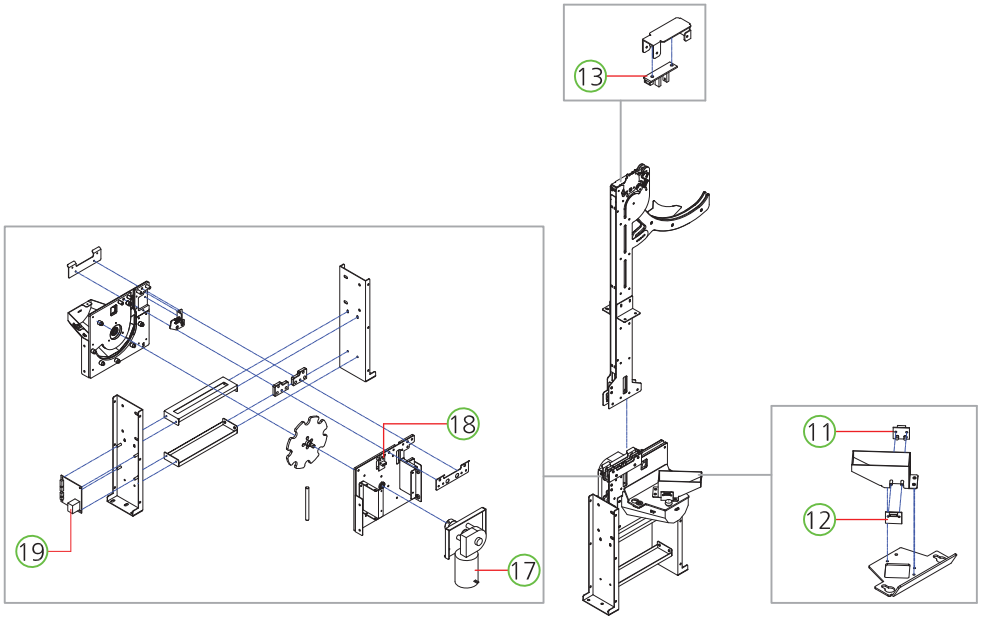

- PUSHER PLATE PART

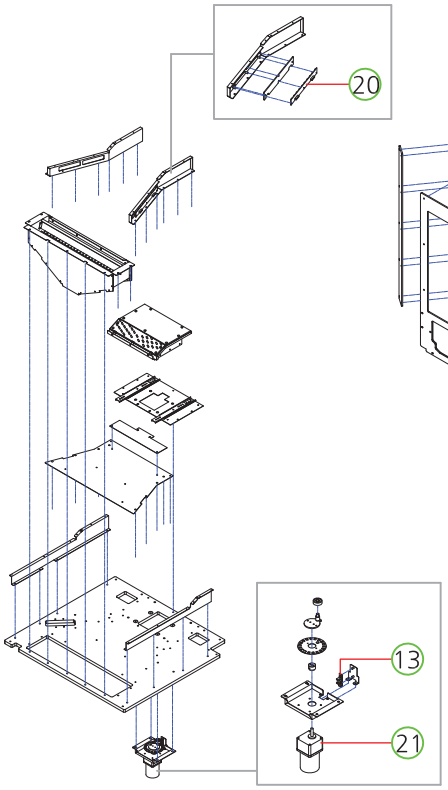

- MONITOR PLATE PART

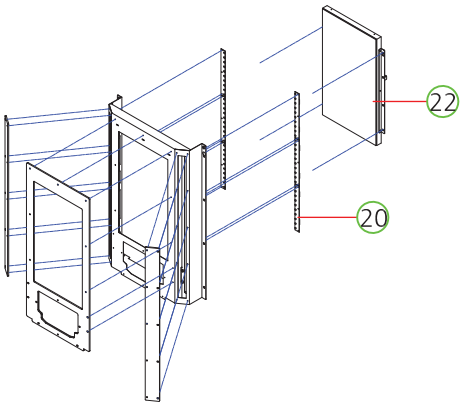

- BONUS TARGET PART

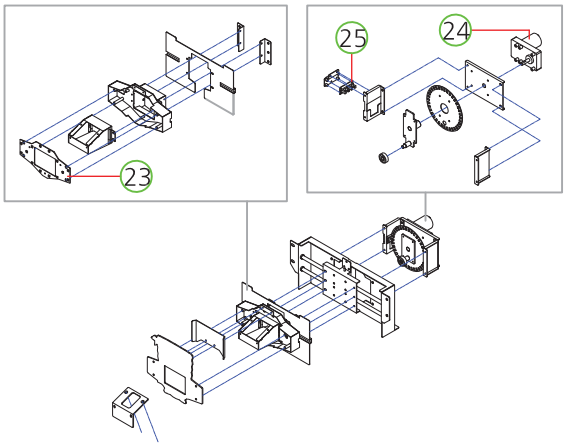

- CHIP HOPPER PART

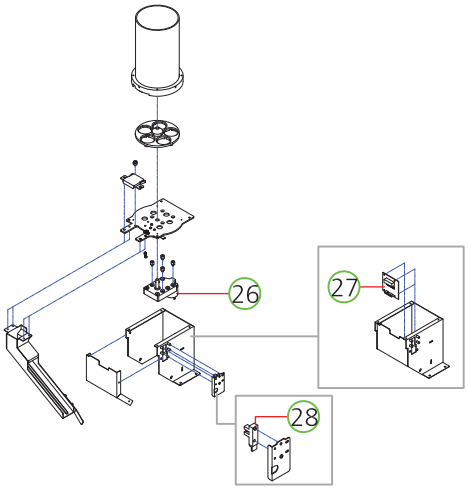

- CARD DISPENSER PART

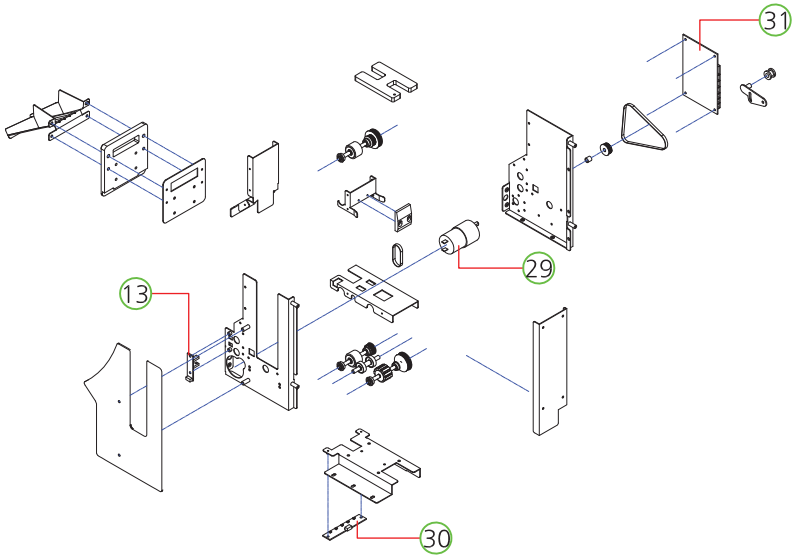

- FRONT LOWER DOOR PART

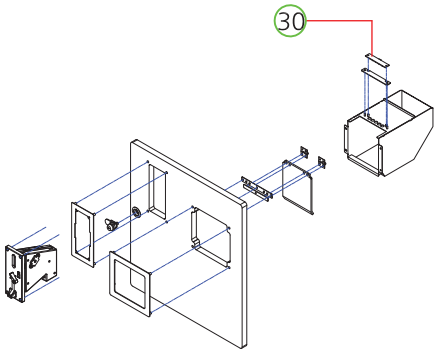

NO.	PIC	PART NAME	SPEC.	QTY	CODE NO.	WARRANTY	
						6 Month	One Year
1	O	FND PCB ASS'Y	6390-4(STRAIGHT)	1	AFND0PCB011		O
2	O	POWER SMPS	RSP-320-5	1	MELE0SMP126		O
3	O	POWER SMPS	RSP-320-12	4	MELE0SMP109		O
4	O	MAIN BOARD PCB ASS'Y	WITH CPU	1	ASPP0PCB001		O
5	O	SERIAL HUB PCB ASS'Y	-	1	AZZZ0PCB194		O
6	O	L6205 HOPPER PCB ASS'Y	-	2	AZZZ0PCB141		O
7	O	VOLUME PCB ASS'Y	-	1	AHM20PCB016		O
8	O	SETUP LCD PCB ASS'Y	-	1	AZZZ0PCB113		O
9	O	MOTOR	HM37-1232A-M005 (12V, 32rpm)	1	MZZZ0MOT164	O	
10	O	ELEVATOR DISK SENSOR PCB ASS'Y	-	1	AGHP0PCB020		O
11	O	WHEEL FAIL BALL CHECK PCB_RECEIVER	-	2	ASPP0PCB004		O
12	O	WHEEL FAIL BALL CHECK PCB_EMITTER	-	2	ASPP0PCB003		O
13	O	PHOTO INT-1 PCB ASS'Y	ANGLE TYPE	5	AZZZ0PCB103		O
14	O	MOTOR DRIVER IO PCB ASS'Y	-	1	ASPP0PCB002		O
15	O	MOTOR	KGC-3429(KD1-3429-075), 1/210(31RPM)	1	MZZZ0MOT088	O	
16	O	MOTOR	KGE-0116-ND3657 U1 (12V, 43rpm)	1	MZZZ0MOT155	O	
17	O	MOTOR	HM37-1232A-M005 (12V, 32rpm)	1	MZZZ0MOT164	O	
18	O	ELEVATOR DISK SENSOR PCB ASS'Y	-	1	AGHP0PCB020		O
19	O	L6205 HOPPER PCB ASS'Y	-	1	AZZZ0PCB141		O
20	O	MONITOR SIDE LED PCB ASS'Y	-	8	ASPP0PCB005		O
21	O	AC MOTOR	K6IG6NC	1	MZZZ0MOT094	O	
	O	[GEAR HEAD]	K6G90C	1	MSAW0ZZZ008		
22	O	MONITOR	23"	1	MZZZ0LCD017		O
23	O	BONUS TARGET SENSOR PCB ASS'Y	-	1	AWWE0PCB005		O
24	O	MOTOR	KGV-0120-ND3657 U1	1	MZZZ0MOT141	O	
25	O	PHOTO INT2 PCB ASS'Y	-	1	AWIW0PCB009		O
26	O	MOTOR	KGE-0162-KD3429T1-SSF	1	MZZZ0MOT134	O	
27	O	CHIP HOPPER PCB ASS'Y	-	1	AZZZ0PCB153		O
28	O	PHOTO SENSOR	LG-217L3	1	MELE0PHO007		O
29	O	MOTOR	KGC-3429(KD1-3429-075), 1/40(163RPM)	1	MZZZ0MOT089	O	
30	O	LED PCB ASS'Y	-	2	AMUM0PCB005		O
31	O	CARD DISPENSER IO PCB ASS'Y	-	1	ASBP0PCB008		O

1	2	3	4	5	6
AFND0PCB011	MELE0SMP126	MELE0SMP109	ASPP0PCB001	AZZZ0PCB194	AZZZ0PCB141

7	8	9	10	11	12
			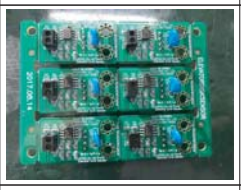		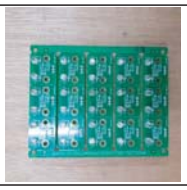
AHM20PCB016	AZZZ0PCB113	MZZZ0MOT164	AGHP0PCB020	ASPP0PCB004	ASPP0PCB003

13	14	15	16	17	18
					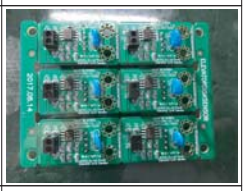
AZZZ0PCB103	ASPP0PCB002	MZZZ0MOT088	MZZZ0MOT155	MZZZ0MOT164	AGHP0PCB020

19	20	21	22	23	24
AZZZ0PCB141	ASPP0PCB005	MZZZ0MOT094	MZZZ0LCD017	AWWE0PCB005	MZZZ0MOT141

25	26	27	28	29	30
			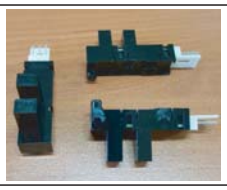		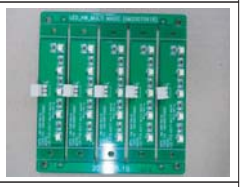
AWIW0PCB009	MZZZ0MOT134	AZZZ0PCB153	MELE0PHO007	MZZZ0MOT089	AMUM0PCB005

31
ASBP0PCB008

* HOW TO CONNECT THE CARD SWIPE

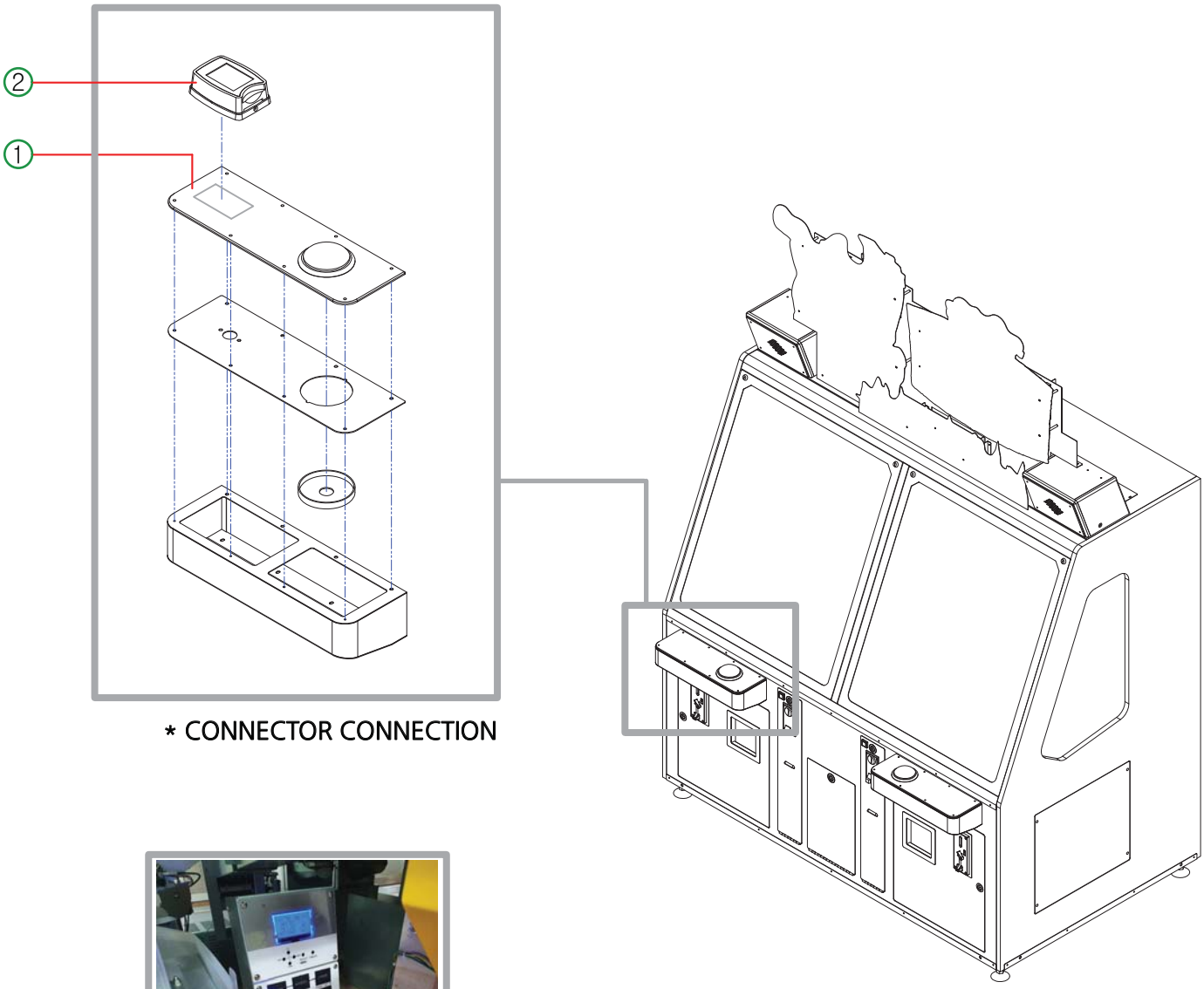

* CONNECTOR CONNECTION

- Power off the machine, detach ① BUTTON PLATE COVER ACRYL-L, R. (M4 Bolt, 8ea) And make the hole by using proper tool.

- Install ② CARD SWIPE as the picture.

* Connect CARD SWIPE connector inside of BUTTON PLATE ACRYLIC.

- And then, open LOWER DOOR and power on ③ power switch.

* HOW TO ADJUST THE GAP OF CARD DISPENSER

1

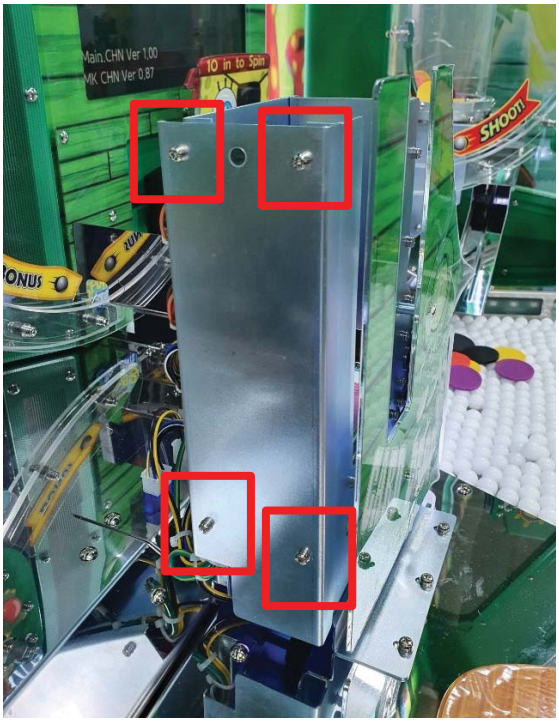

- Remove the cover by removing the rear fixing bolts.[Bolt 4ea]

2

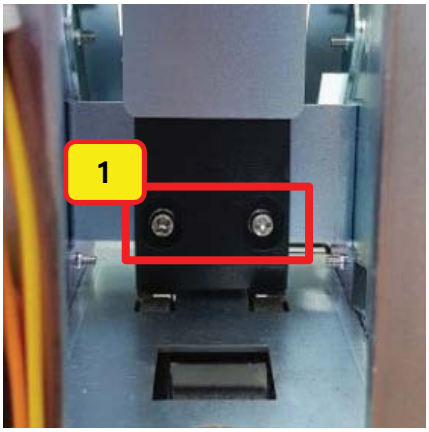

- Unlock little bit of fix bolt 2ea at No.1.

3

- Prepare CARD SETTING JIG as a picture.

4

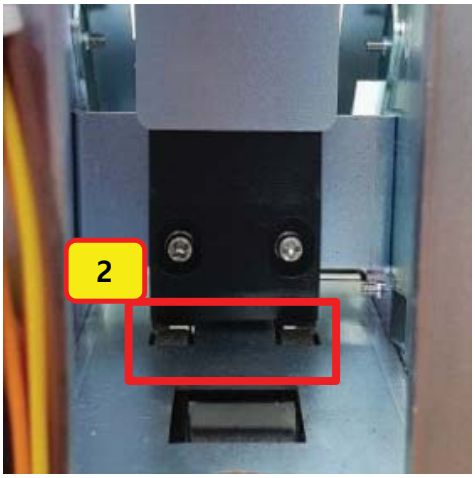

- Insert the CARD SETTING JIG at No.2. (lower side of black acrylic)

5

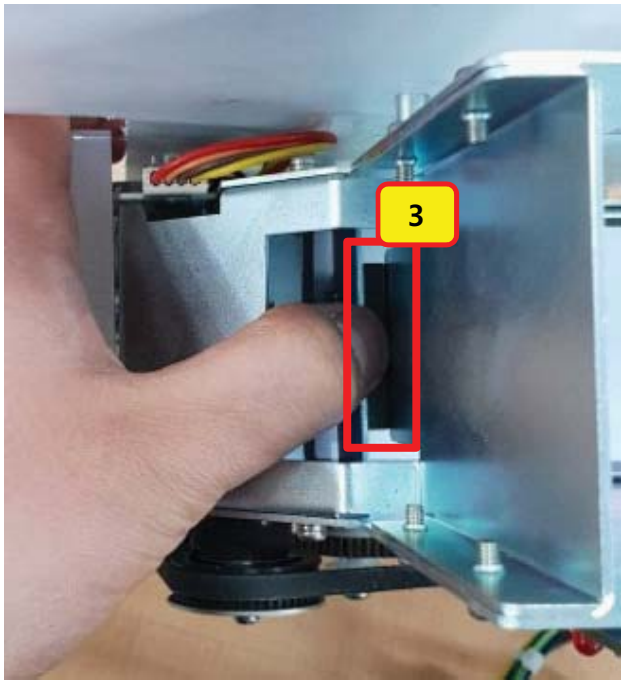

- Lock the bolt section 2 pressing upper side of black acrylic between the gaps of No.3 while the card is located.

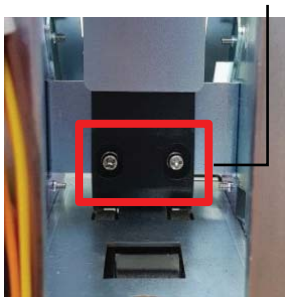

6

- Check if it is tight when you try to insert the CARD SETTING JIG again as left picture. If it is easy to insert or impossible to insert, go back to section 2 and work again.

- Gap between the arrows of left picture. (No.2 of section 4)
  Allowable value: 1.1~1.3 mm
  Thickness of normal card: 0.8 mm

7

- After processing until section 9, run operation test.
  TEST MODE -> CARD DISPENSER TEST

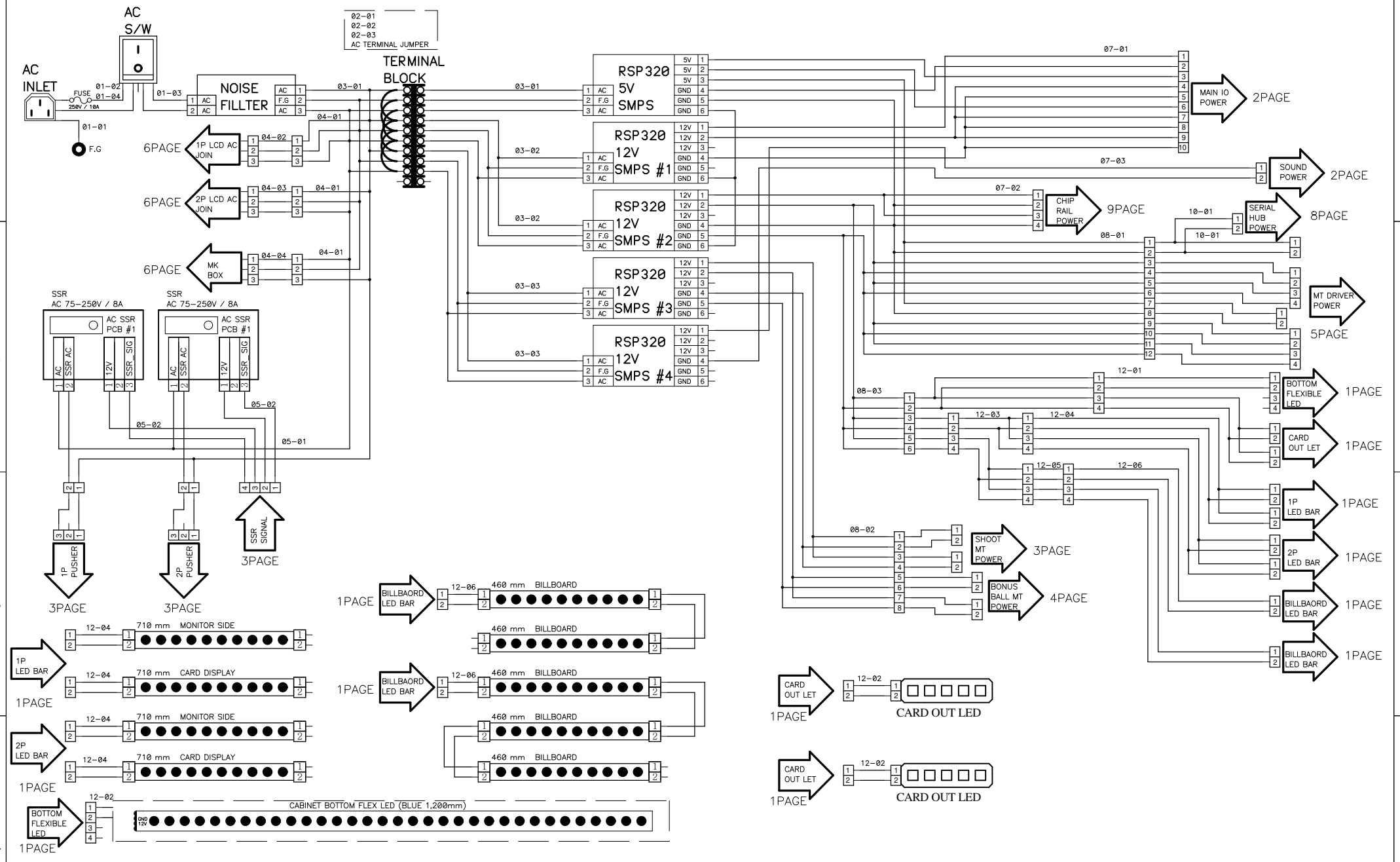

REPRODUCTION, DISTRIBUTION AND UTILIZATION OF THIS DOCUMENT AS WELL AS COMMUNICATION OF ITS CONTENTS TO OTHERS WITHOUT EXPRESS AUTHORIZATION PROHIBITED. OFFENDERS WILL BE HELD LIABLE FOR THE PAYMENT OF DAMAGES.ALL RIGHT RESERVED. COPYRIGHT (c) ANDAMIRO

(복제, 배포 및 사용은 물론, 명시적 허가 없이는 타인에게 내용을 전달할 수 없으며 위반자는 손해 배상 책임을 집니다.)

DEPARTMENT	DRAWN BY	CHECKED BY	APPROVED BY	ITEM	POWER BOX
H/W				PAGE	1/8 PAGE
		ANDAMIRO		DATE	

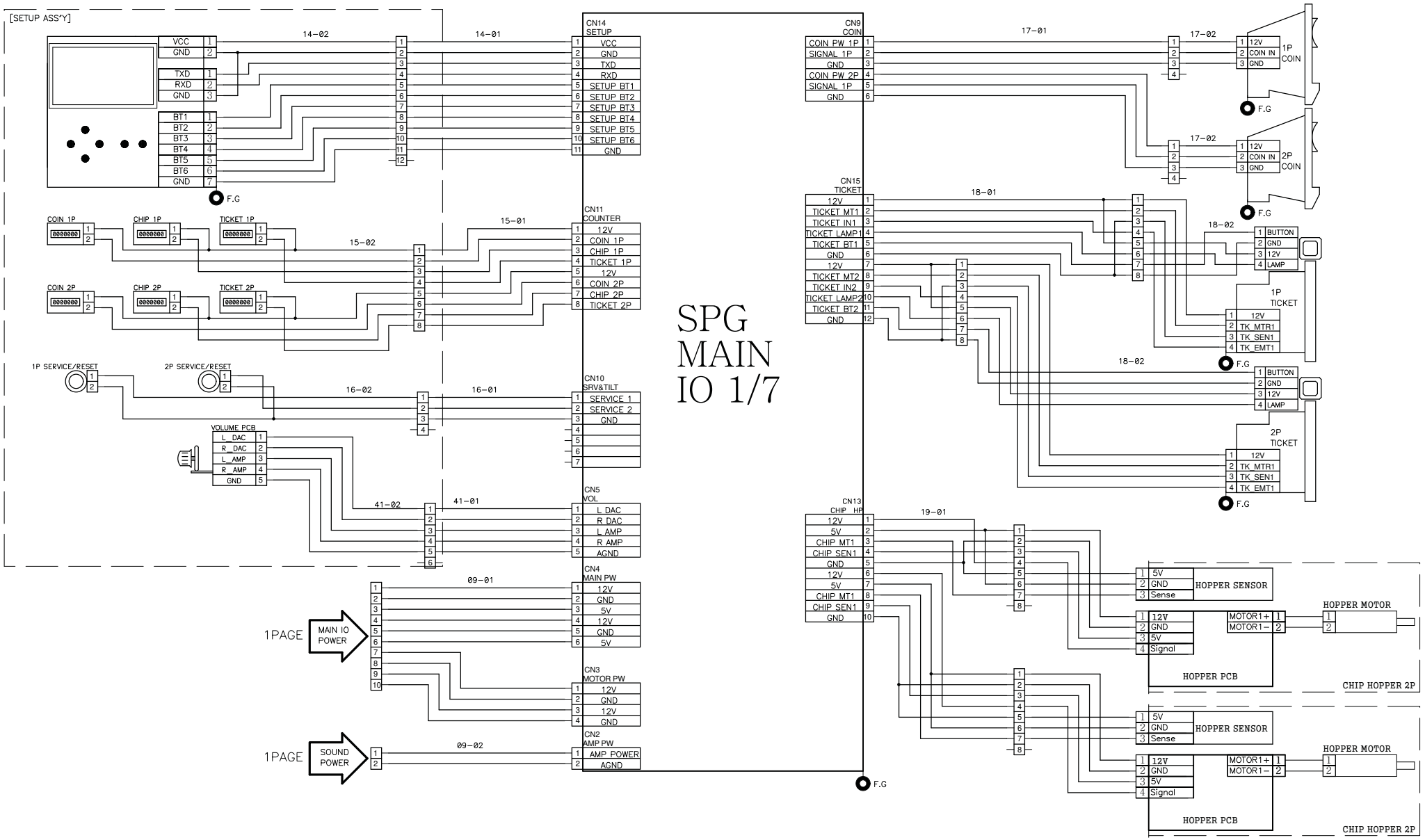

REPRODUCTION, DISTRIBUTION AND UTILIZATION OF THIS DOCUMENT AS WELL AS COMMUNICATION OF ITS CONTENTS TO OTHERS WITHOUT EXPRESS AUTHORIZATION PROHIBITED. OFFENDERS WILL BE HELD LIABLE FOR THE PAYMENT OF DAMAGES.ALL RIGHT RESERVED. COPYRIGHT (c) ANDAMIRO

(복제, 배포 및 사용은 물론, 명시적 허가 없이는 타인에게 내용을 전달할 수 없으며 위반자는 손해 배상 책임을 집니다.)

DEPARTMENT	DRAWN BY	CHECKED BY	APPROVED BY	ITEM	SETUP & COIN & TICKET & CHIP
H/W				PAGE	2/8 PAGE
		ANDAMIRO		DATE	

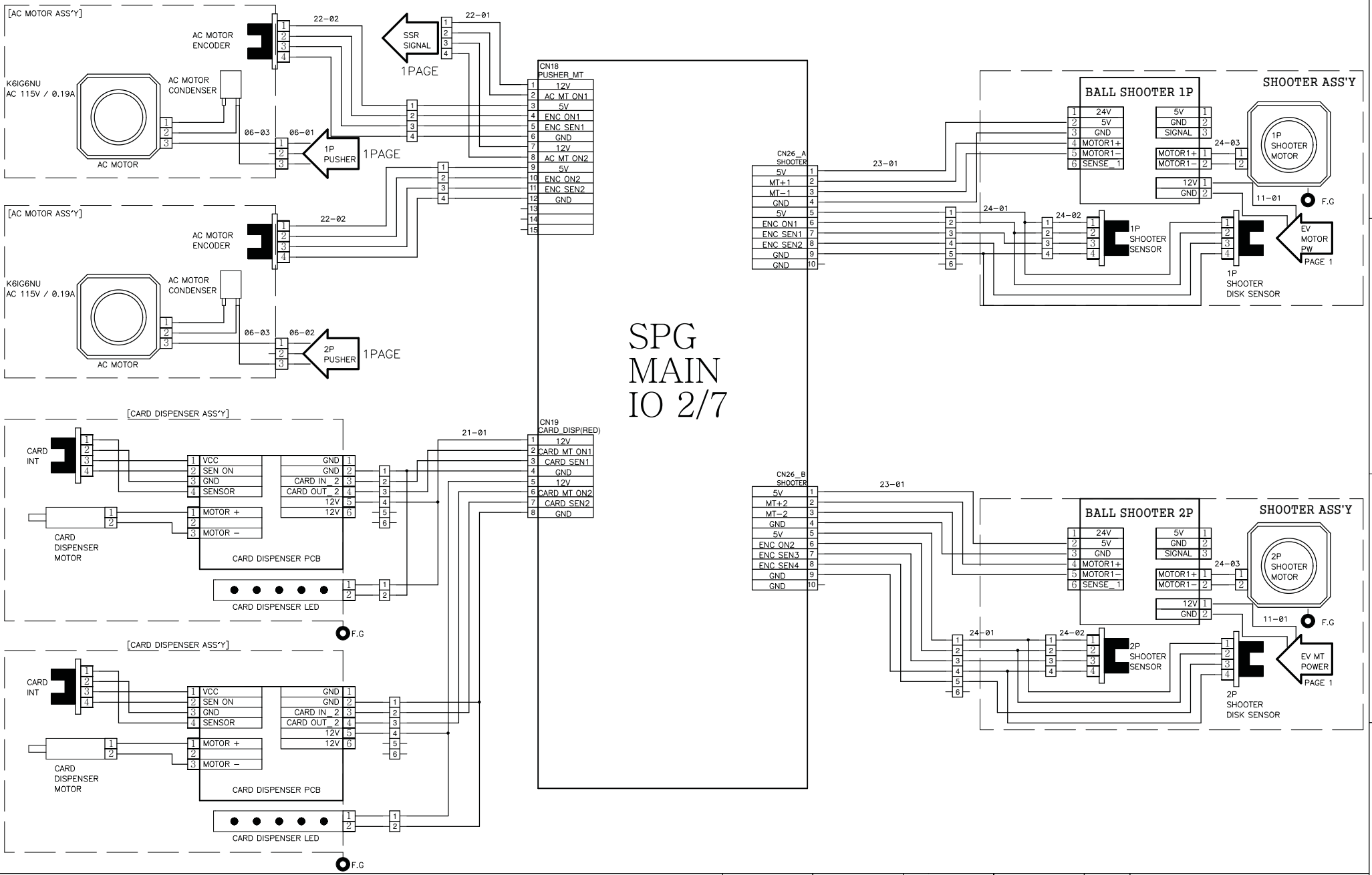

REPRODUCTION, DISTRIBUTION AND UTILIZATION OF THIS DOCUMENT AS WELL AS COMMUNICATION OF ITS CONTENTS TO OTHERS WITHOUT EXPRESS AUTHORIZATION PROHIBITED. OFFENDERS WILL BE HELD LIABLE FOR THE PAYMENT OF DAMAGES.ALL RIGHT RESERVED. COPYRIGHT (c) ANDAMIRO

(복제, 배포 및 사용은 물론, 명시적 허가 없이는 타인에게 내용을 전달할 수 없으며 위반자는 손해 배상 책임을 집니다.)

DEPARTMENT	DRAWN BY	CHECKED BY	APPROVED BY	ITEM	PUSH MT & CARD DISP BALL SHOOTER
H/W				PAGE	3/8 PAGE
		ANDAMIRO		DATE	

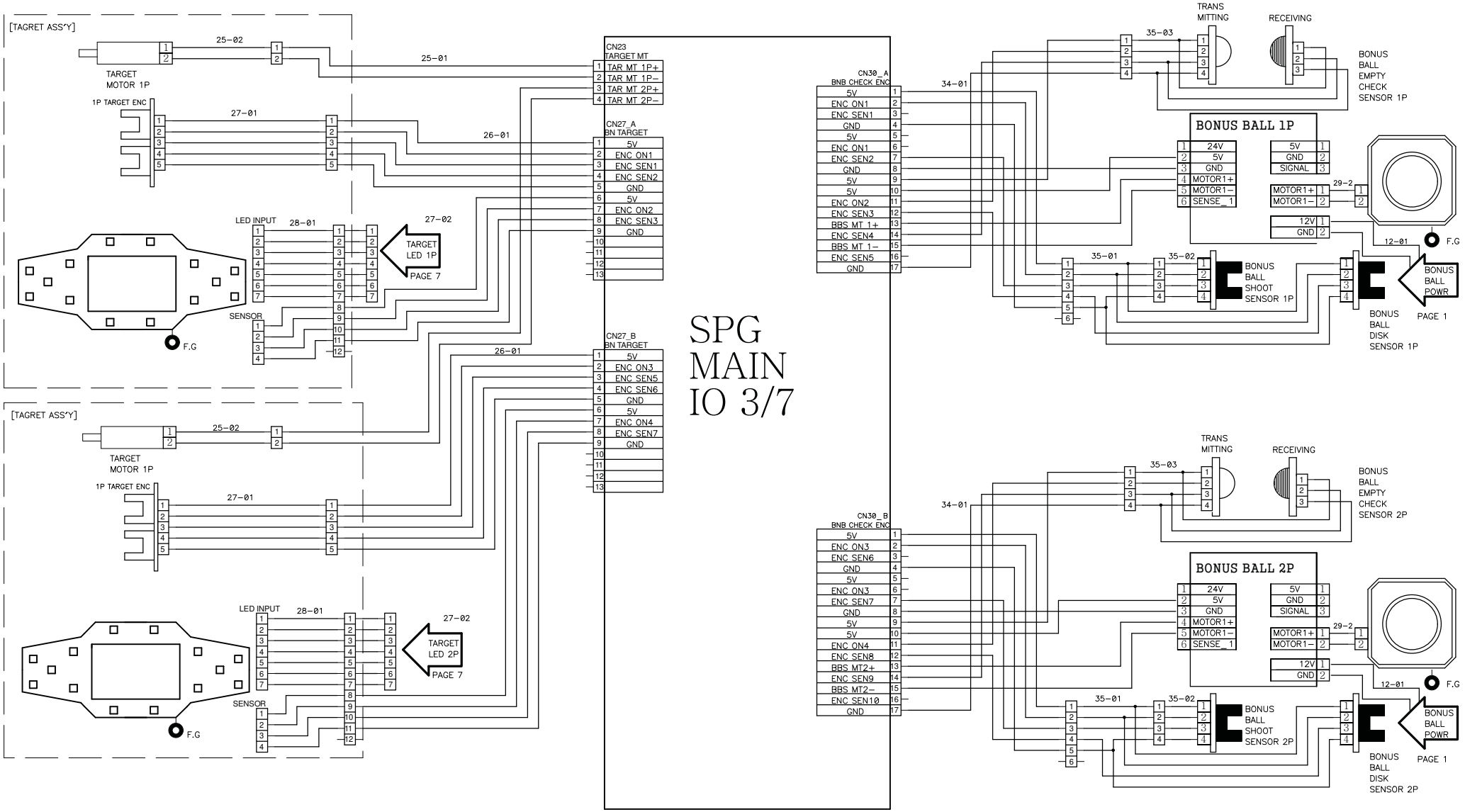

REPRODUCTION, DISTRIBUTION AND UTILIZATION OF THIS DOCUMENT AS WELL AS COMMUNICATION OF ITS CONTENTS TO OTHERS WITHOUT EXPRESS AUTHORIZATION PROHIBITED. OFFENDERS WILL BE HELD LIABLE FOR THE PAYMENT OF DAMAGES.ALL RIGHT RESERVED. COPYRIGHT (c) ANDAMIRO

(복제, 배포 및 사용은 물론, 명시적 허가 없이는 타인에게 내용을 전달할 수 없으며 위반자는 손해 배상 책임을 집니다.)

DEPARTMENT	DRAWN BY	CHECKED BY	APPROVED BY	ITEM	TARGET & BONUS BALL SHOOTER
H/W				PAGE	4/8 PAGE
		ANDAMIRO		DATE	

SPG MAIN IO 4/7

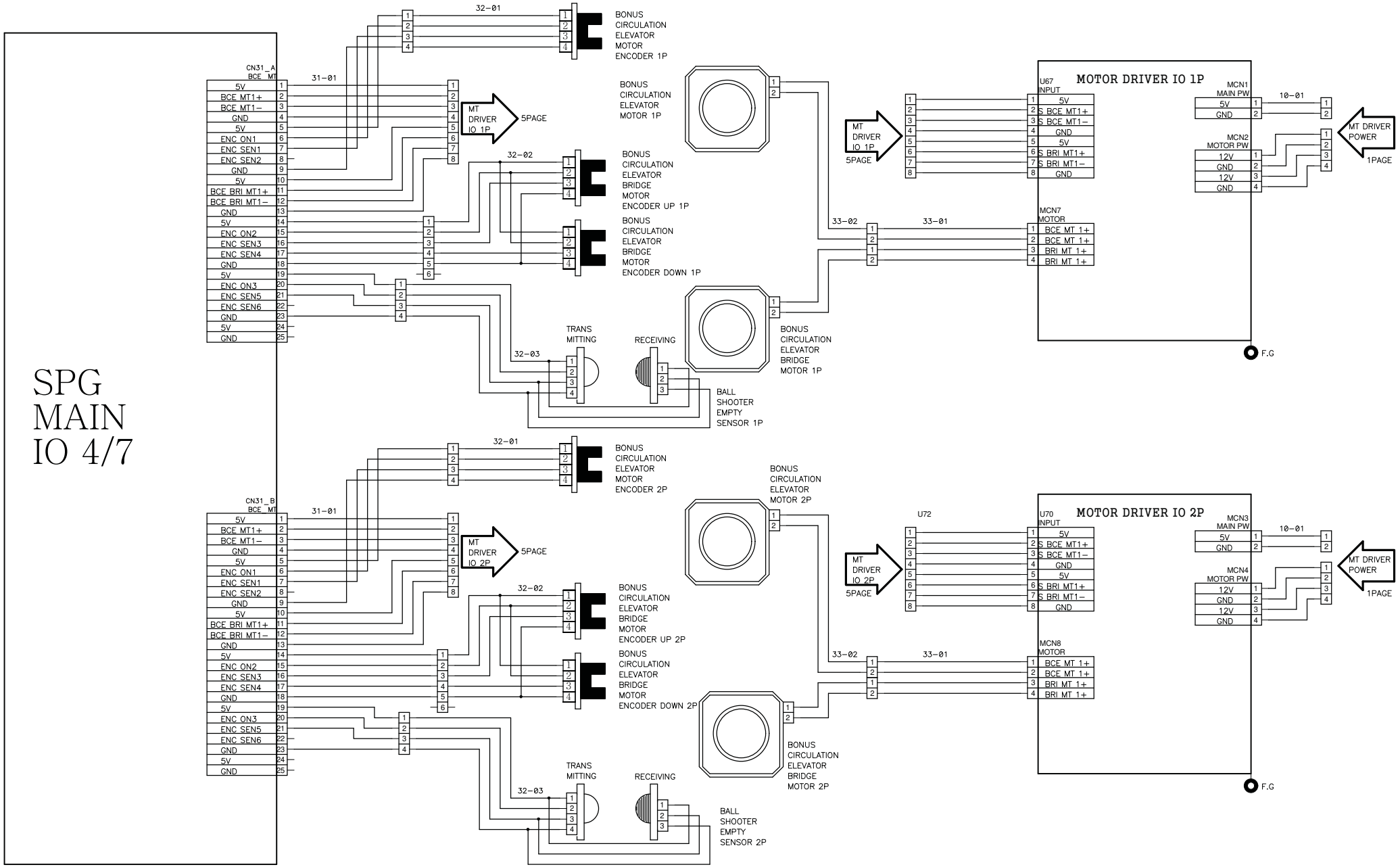

REPRODUCTION, DISTRIBUTION AND UTILIZATION OF THIS DOCUMENT AS WELL AS COMMUNICATION OF ITS CONTENTS TO OTHERS WITHOUT EXPRESS AUTHORIZATION PROHIBITED. OFFENDERS WILL BE HELD LIABLE FOR THE PAYMENT OF DAMAGES.ALL RIGHT RESERVED. COPYRIGHT (c) ANDAMIRO

(복제, 배포 및 사용은 물론, 명시적 허가 없이는 타인에게 내용을 전달할 수 없으며 위반자는 손해 배상 책임을 집니다.)

DEPARTMENT	DRAWN BY	CHECKED BY	APPROVED BY	ITEM	BBE & BBE BRI MT
H/W				PAGE	5/8 PAGE
		ANDAMIRO		DATE	

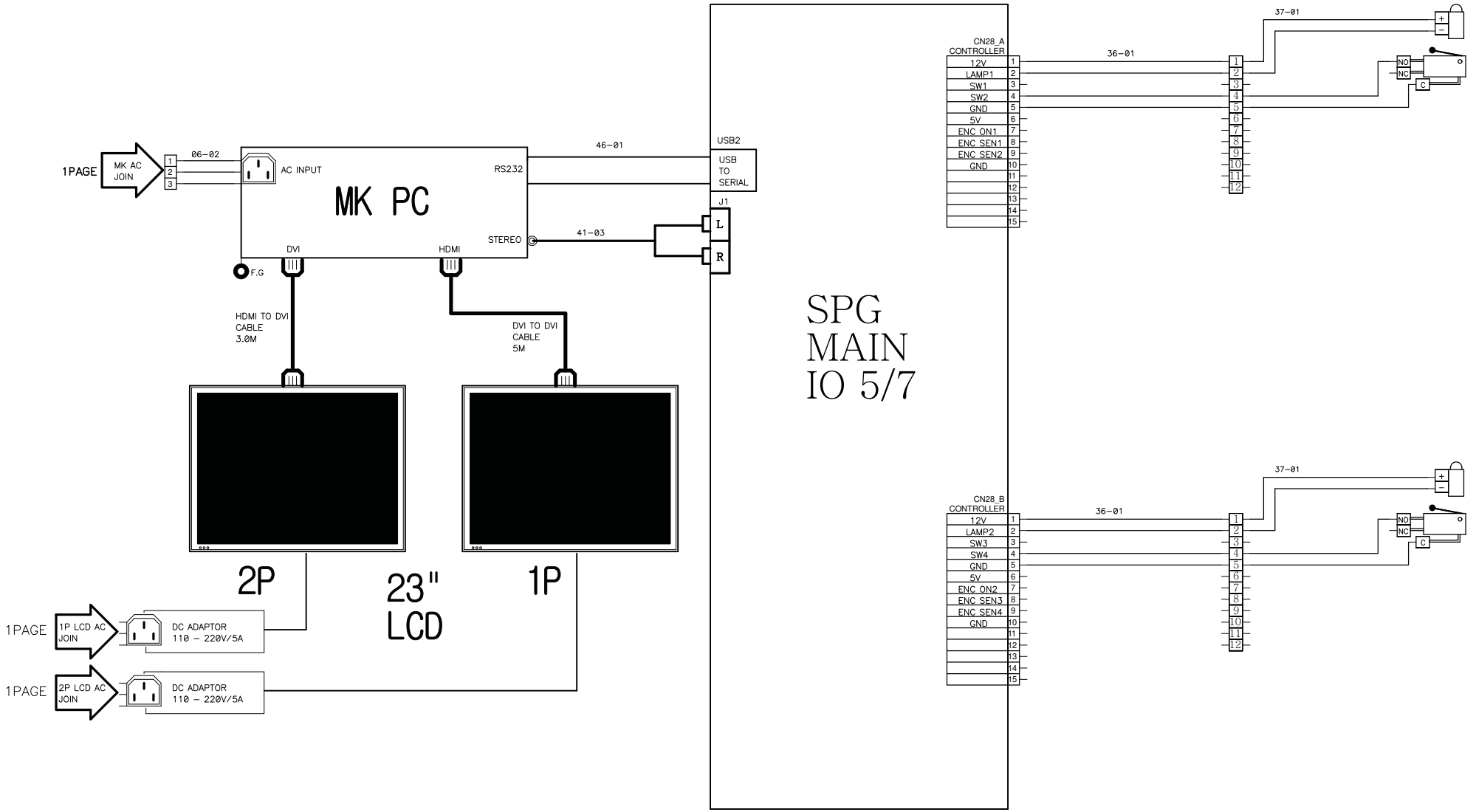

REPRODUCTION, DISTRIBUTION AND UTILIZATION OF THIS DOCUMENT AS WELL AS COMMUNICATION OF ITS CONTENTS TO OTHERS WITHOUT EXPRESS AUTHORIZATION PROHIBITED. OFFENDERS WILL BE HELD LIABLE FOR THE PAYMENT OF DAMAGES.ALL RIGHT RESERVED. COPYRIGHT (c) ANDAMIRO

(복제, 배포 및 사용은 물론, 명시적 허가 없이는 타인에게 내용을 전달할 수 없으며 위반자는 손해 배상 책임을 집니다.)

DEPARTMENT	DRAWN BY	CHECKED BY	APPROVED BY	ITEM	MK & CONTROLLER
H/W				PAGE	6/8 PAGE
		ANDAMIRO		DATE	

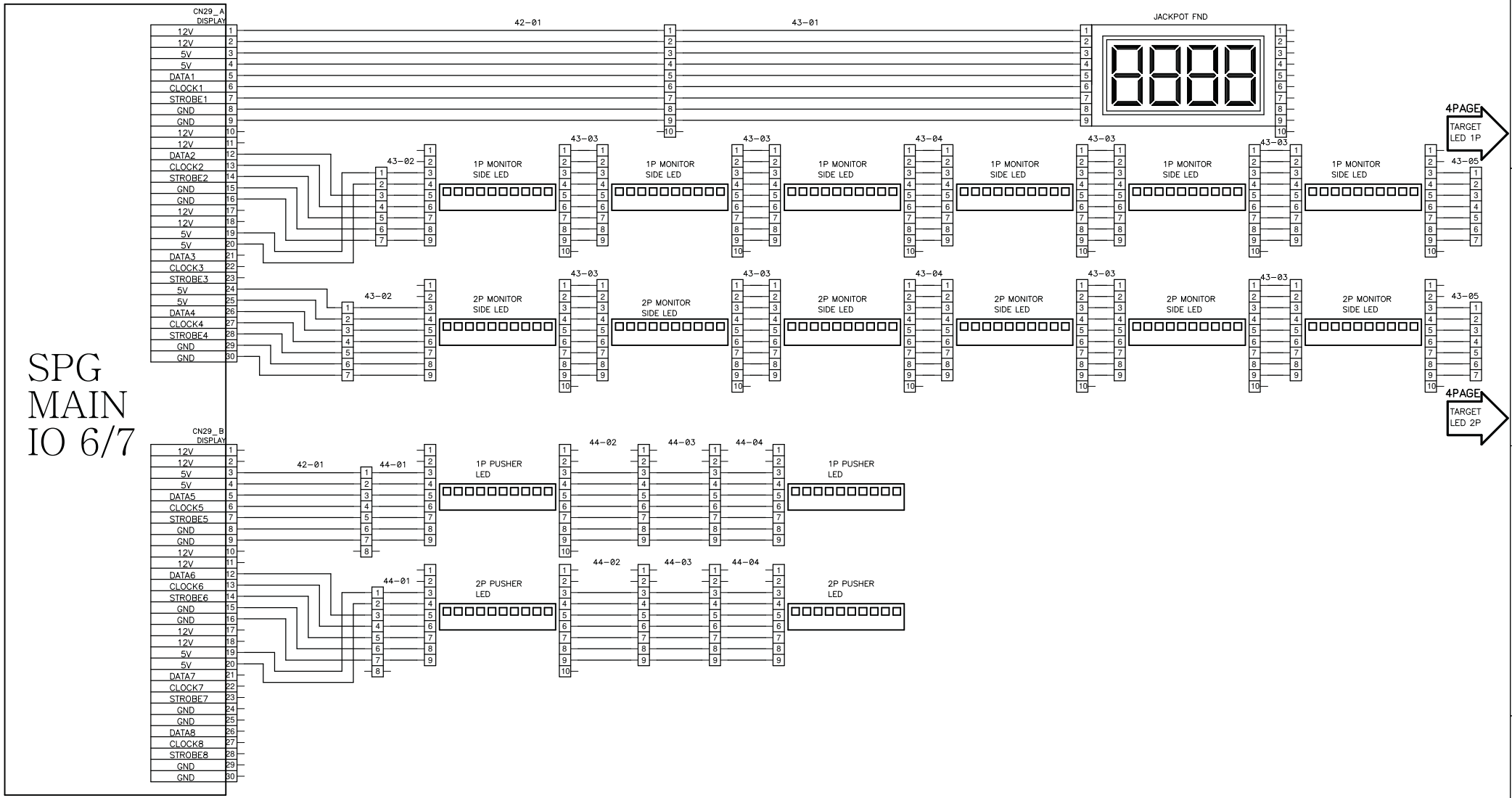

REPRODUCTION, DISTRIBUTION AND UTILIZATION OF THIS DOCUMENT AS WELL AS COMMUNICATION OF ITS CONTENTS TO OTHERS WITHOUT EXPRESS AUTHORIZATION PROHIBITED. OFFENDERS WILL BE HELD LIABLE FOR THE PAYMENT OF DAMAGES.ALL RIGHT RESERVED. COPYRIGHT (c) ANDAMIRO

(복제, 배포 및 사용은 물론, 명시적 허가 없이는 타인에게 내용을 전달할 수 없으며 위반자는 손해 배상 책임을 집니다.)

DEPARTMENT	DRAWN BY	CHECKED BY	APPROVED BY	ITEM	DISPLAY
H/W				PAGE	7/8 PAGE
		ANDAMIRO		DATE	

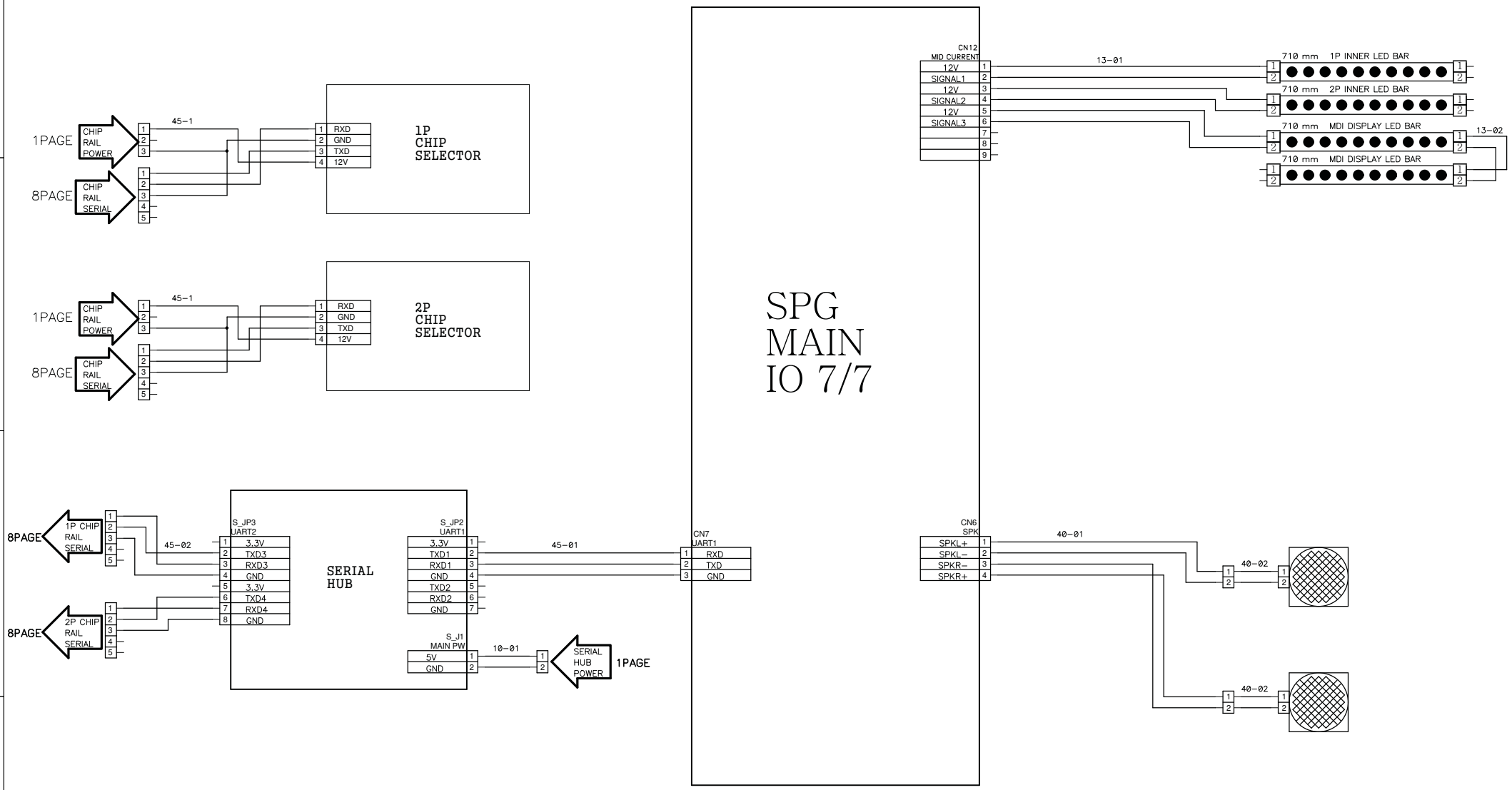

REPRODUCTION, DISTRIBUTION AND UTILIZATION OF THIS DOCUMENT AS WELL AS COMMUNICATION OF ITS CONTENTS TO OTHERS WITHOUT EXPRESS AUTHORIZATION PROHIBITED. OFFENDERS WILL BE HELD LIABLE FOR THE PAYMENT OF DAMAGES.ALL RIGHT RESERVED. COPYRIGHT (c) ANDAMIRO

(복제, 배포 및 사용은 물론, 명시적 허가 없이는 타인에게 내용을 전달할 수 없으며 위반자는 손해 배상 책임을 집니다.)

DEPARTMENT	DRAWN BY	CHECKED BY	APPROVED BY	ITEM	AUDIO & SERIAL
H/W				PAGE	8/8 PAGE
		ANDAMIRO		DATE	

ANDAMIRO WARRANTY POLICY

Andamiro warrants to the original purchaser that all of its products will be free from defects in material and workmanship.

Andamiro warrants the parts from date of shipmet as follows.

- One Year Limited Warranty : Electronic Boards & Monitor
- 6 Month Limited Waranty : Moving Parts

For any key components within the warranty period, Andamiro will repair or replace defective components free of charge.

When placing a warranty request, the customer is requested to furnish the following information:

1. Name of the game.
2. Serial Number of the game.
3. A Detailed Description of the defect/s experienced.

This warranty does not apply to the defects caused due to misuse or abuse of the product.

Any alterations made to game or game parts will void this warranty.

For warranty details on our product range please visit our website, www.andamiro.com.

ANDAMIRO CO., LTD.
www.andamiro.com

Please complete the following request form to place a warranty request and send it to ANDAMIRO Korea either by fax (Fax No: +82-31-908-7548) or by e-mail. The e-mail address of the person in charge of each region is shown in our web-site, www.andamiro.com

For the on-line request, please visit our web-site, www.andamiro.com and click "Customer Service" and then click "Contact Us" in which you shall find the e-mail address of the person in charge of each region.

1. Company Name : _____

2. Mailing Address : _____

_____

3. E-Mail Address : _____

4. Phone No : _____

5. Name of the person in charge : _____

6. Description of the product defects

6-1) Name of the Game : _____

6-2) Serial No : _____

6-3) Date of Purchase : _____

6-4) Detailed description of the product defects.

_____

_____

_____

Remarks: If possible, please provide us with related photos and videos which will be greatly appreciated to verify the cause of the problem.

ANDAMIRO CO., LTD.
TEL : 82-31-909-2123~5

[ADDRESS OFFICE] 704-1 Techno Town, 138, Ilsan-ro, Ilsandong-gu, Goyang-si, Gyeonggi-do, Republic of Korea 10442
[FACTORY] 72 Nochemgil, Ilsan-donggu Goyang-si, Gyonggi-do, 410-834 korea

USA BRANCH
ANDAMIRO USA CORP.
TEL : 1-310-767-5800

[ADDRESS] 17230 S. Main Street Gardena, California 90248 U.S.A.

Homepage http://www.andamiro.com/

ANDAMIRO®